NAVAL
POSTGRADUATE
SCHOOL

MONTEREY, CALIFORNIA

CONRAD ESSAY

Analysis of the Ship Operations Model's Accuracy in Predicting U.S. Naval Ship Operating Cost

---

By: LCDR Andrew Hascall, USN
LT Kyle Gantt, USN

June 5, 2003

Advisors: **Professor Shu S. Liao**
Captain John E. Mutty, USN, Ret.
Sponsor: **LCDR Mike McLean, USN, FMB 123**

Approved for public release; distribution is unlimited.

I. INTRODUCTION

A. BACKGROUND

"We must challenge every assumption and search for new and better ways to accomplish our tasks. We must refine requirements, conduct innovative operations, and optimally allocate resources to achieve efficiencies and recapitalize the Fleet."

CNO's 2003 Leadership Guidance

The cost of operating Navy ships is difficult to determine, but extremely important to accurately predict. Under-funding in this area could result in the deferral of equipment replacement and spare parts replenishment/consumption, ultimately reducing the Navy's current level of readiness. Over-funding could hinder the Navy's efforts to recapitalize assets in order to meet future threats. As the quote above underscores, the Navy is determined to more accurately predict resource needs in order to fully fund recapitalization efforts.

Within the Operations and Maintenance, Navy (O&M,N) and Operations and Maintenance, Navy Reserve (O&M,NR) appropriations categories, the Mission and Other Ship Operations (1B1B) sub-activity group provides "resources for all aspects of ship operations required to continuously deploy combat ready warships and supporting forces in support of national objectives" (FY 2003 President's Budget). The 1B1B sub-activity group, to be referred to as Ship Ops throughout this paper, has its resource requirements determined by the OPNAV N80 (programming) staff. The 1B1B program area is divided into five subprograms:

Charter

Fuel

Utilities

TAD (Travel and Trainings costs: Temporary Additional Duty)

OPTAR (Operating Target: Includes Repair Parts and Consumables purchases)

The Ship Ops sub-activity group includes the costs within each subprogram for all active and reserve ships. The OPNAV N82 office responsible for this sub-activity, also known as the Office of Budget (FMB), must collect inputs, assess requirements, and provide resources as necessary to support the requirements. Figure 1 shows the percentages of the total FY 2004 Navy Budget for O&M, N and Ship Ops.

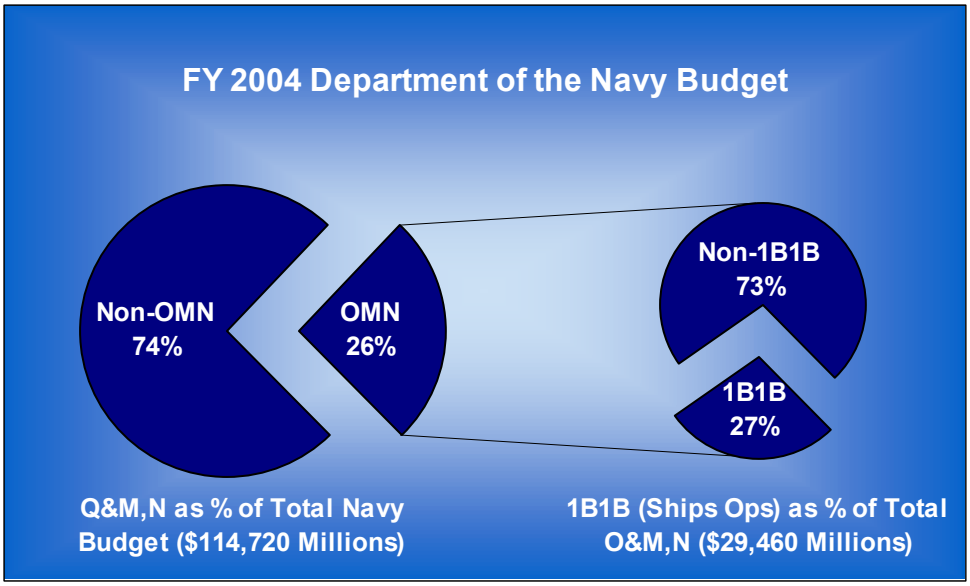

Figure 1: Percentages of the Total Navy Budget for O&M,N and 1B1B

In order to support this sub-activity, N80 must have accurate tools to forecast requirement costs based on fleet inputs. The OPNAV staff uses the Ship Ops model to determine the resource requirements for ship operations. The model was developed by the OPNAV N80 (programming) staff several years ago to consolidate inputs from numerous resource sponsors. By consolidating resource sponsor efforts, the model advocates a standardized Navy approach to determining resource requirements for Ship Ops. The existing model uses three-year moving averages and average number of ships in commission to estimate ship-operating costs for the upcoming year.

B. RESEARCH DISCUSSION

FMB feels the current model provides a good first estimate of costs, but wanted an evaluation of the model as a predictor of actual ship operations costs. FMB has also expressed an interest in the possible development of a more accurate (specifically in predicting SR and SO) and flexible (to include operational data such as days underway) model. The current model estimates ship costs according to ship class, using a three-year average of previous years' actual operating costs per ship multiplied by the average number of ship years per class. A ship year is defined as a ship in commission for a full year.

Though the current model provides FMB with a good first approximation of operating costs for a class of ships, FMB feels the model could be improved in its ability to predict SR and SO cost. Further, the current model does not provide the means to estimate the effect of increased Operations Tempo (OPTEMPO) in the middle of the year. For instance, if the Abraham Lincoln Carrier Battle Group (CVBG) is extended on deployment, the model is unable to predict the additional costs. While FMB can produce some numbers to estimate additional operating costs, these numbers are not very defensible when requesting increased funding.

C. OBJECTIVES

The intent of this project was to evaluate the current model used by the Office of Budget (FMB) to forecast future operating costs for Navy ships and to develop an improved model if warranted. Further, we sought to develop relationships between operational data and costs for use in determining supplemental funding requirements.

II. USE AND LIMITATIONS OF THE CURRENT MODEL

The model provides FMB with a summary of predictive costs to be used for resource requests. The model has been in use for about five years and there has not been a detailed comparison of actual costs to predicted costs. The obvious limitations of the model are scalability and flexibility. The summary output provided by this model can only be reduced, at the lowest level, by ship class and sponsor. The user cannot easily input proposed operational adjustments to multiple ships to see the predictive effects on cost.

Another limitation of the model is its reliance on the outputs using a three-year moving average of unit costs. This method provides a simple means for making cost predictions and rapidly incorporates the effects of the current environment. Drawbacks to its use in the model are that the third year's data are an estimate and that one year can have a significant impact in the unit's output (e.g., while planning year 2003's costs, the programmer only had preliminary cost data for 2002 based on the past 6-9 months from the current fiscal year, which is better than a simple prediction, but still not actual cost).

Before analyzing the effectiveness of the current model by comparing actual with predicted operating costs, the following section will detail the data that were used to compare actual costs with those that were predicted by the current Ship Ops model.

III. DATA COLLECTION

A. COST DATA

Cost data were used in this project for two purposes: first, to evaluate the current Ship Ops model's predictive capabilities; and second, to build a modified model and compare its predictions to that of the existing model. We used various versions of the current model, which were provided by FMB, to gather historical cost data for the appraisal part of our work. The Atlantic and Pacific Fleets, and multiple Type Commanders (TYCOMs) provided the information for the modified model.

However, we had certain qualitative and quantitative reservations regarding the data. The qualitative problem surfaced when we were assessing the current model's accuracy. It appeared we were not looking at the "first estimates" provided by the Ship Ops model (by first estimate we are referring to the predictions that were produced for the purposes of the initial budgeting). Some of the inputs (e.g., price growth) might have been updated during the fiscal year in order to get more accurate results. The benefit from doing this is that more accurate estimates can support the argument for additional funding when the need arises. Though our analysis uses only actual data, our conclusion could be slightly or significantly different if we compared the "first estimates" to the actual cost figures. Our methodology chosen for the analysis – separating the effects caused by the model's discrepancies and effects stemming from input inaccuracy – ensures that the basic evaluation remains the same regardless of whether we used the "first estimates" or not. The problem resulting from using the updated predictions is that the difference caused by the unreliable inputs may be more significant than we indicated.

Quantitative problems were mainly caused by the problem of data availability. We faced this problem during the process of building the modified model. Since we used various sources, the historical cost data were not always available for the same years. The Navy Energy Usage Reporting System (NEURS) data (days underway while under various Operational Controls (OPCON)) provided by LANTFLT is only available through FY 96. NEURS data provided by PACFLT go back through FY 92. Cost data, contained in the models provided by FMB, are only available back through FY 94. This

means that we had to find the lowest common denominator, that is, incorporating only those fiscal years into the project where "all" the data were accessible.

When conducting our initial regression analysis it became evident that regressions that did not include price growth factors were more significant than those that did include them. This raised suspicion concerning the validity of the inflation factors used in the model. Further investigation by FMB concluded that in order to obtain a weighted average inflation factor to be used in the model, the Inflation Category Codes, which are assigned by the TYCOMs, were not properly assigned. Therefore, through consultation with FMB, we concluded it was more relevant to exclude inflation factors in regressions used in formulation of a modified model.

B. EMPLOYMENT DATA

In order to determine the number of days a given ship (or in aggregate, a ship class) was underway during a given year, we obtained data from the NEURS database. NEURS is a program the Navy uses to monitor days underway for all surface ships (It primarily records the amounts of fuel used. For our purposes, days underway is the most relevant information). We were able to determine if a ship was underway while on deployment or underway while not on deployment. With these data we are better able to dissect the employment of ships. When performing analysis by ship class, the variables used were days underway while deployed (aggregation of all deployed OPCONs) and days underway while not deployed. Because of the limited data points available for analysis we were unable to use the additional variable (Deployed to Fifth Fleet) without sacrificing the statistical accuracy of the regressions.

C. SHIP CLASSES CHOSEN

For our analysis of the current model we chose to use the Pacific Fleet DDG-51 class, because of the amount of data available. It is a large class and it represents the growth of the fleet. In Chapter IV, we use five ship classes FFG-7, DDG-51, CG-47, DD-963, and LHA-1 to give an overview of the model's accuracy at the ship class level for the period FY97 through FY02. These classes provide a broad representation of the surface fleet. DDG-51 represents a class experiencing growth while FFG-7 and DD-963

are classes experiencing contraction. LHA-1 and CG-47 are ship classes, that remain stable in numbers throughout the period analyzed.

In our regression analysis, we were limited in the ship classes we were able to study. For example, we were unable to obtain submarine employment data from Naval Sea Systems Command (NAVSEA 08). NAVSEA 08 does not track days underway; they maintain information similar to NEURS, but instead of days underway tracks Effective Full Power Hours for reimbursement to DOE. We performed regression analysis on the following 15 classes of ships for which we had all operations data:

AOE-1	AOE-6	MCM-1	MHC-51	LHA-1
LHD-1	LPD-4	LSD-36	LSD-41	CG-47
DDG-51	DD-963	FFG-7	ARS-50	CVN-68

Table 1: Ship Classes Used in Regression Analysis

Section IV analyzes the effectiveness of the model by comparing actual with predicted operating costs. Before presenting our results, this section details our methodology and analysis application.

IV. DATA ANALYSIS

A. METHODOLGY

In this section we will discuss the methodology for evaluating the Ship Ops model. Generally, the model creates an average unit cost (per ship year or per OP-MONTH), and then uses *estimated* execution data to generate the predicted basic requirement for the next year. This basic requirement is then adjusted by the *estimated* price growth (percentage growth or decrease) and/or by the *estimated* incremental cost in order to derive the adjusted requirement for the given year.[1]

To filter the inaccuracies of the estimated operational and financial inputs, we created ***"predicted from all actual data"*** (PFAD) costs for ex-post prediction. Figure 2 shows the structure of the inputs used in the model to produce these quasi-predicted numbers. The PFAD costs demonstrate what would have happened if all the inputs had been absolutely precise.

[1] Incremental costs are one-time costs such as replacing foam mattresses with spring mattresses. Incremental costs can be determined and used by the RS or CL for each cost element.

Figure 2: Creation of "Prediction from all Actual" (PFAD) Costs

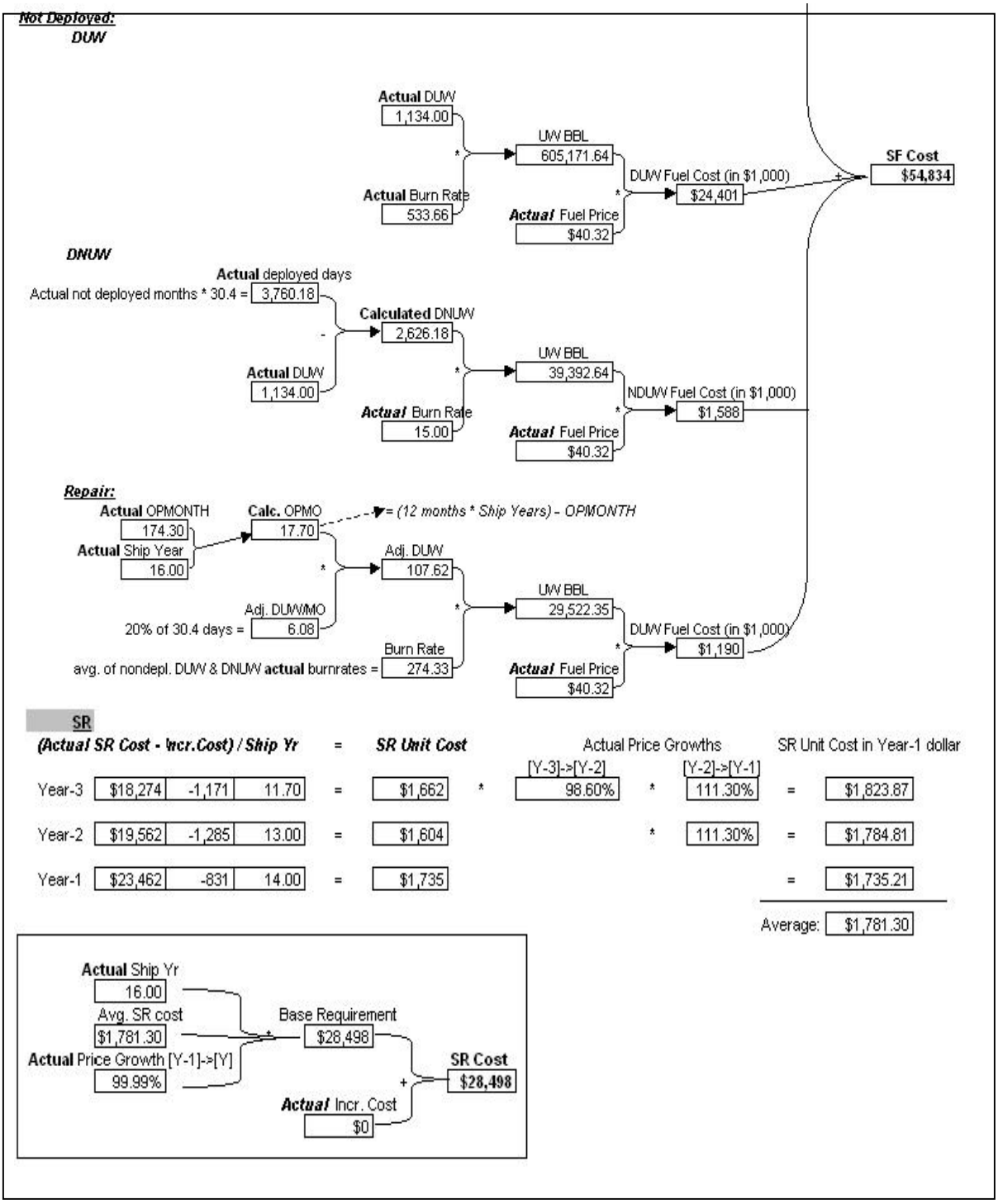

Figure 3: Development of PFAD Costs

Including the actual cost data, we have three numbers for comparison for each cost element: actual, predicted, and PFAD. The model's total inaccuracy can be calculated by subtracting the predicted cost from the actual:

Model's total inaccuracy = Actual cost – Predicted cost

In this way we get the difference between budgeted (predicted) and incurred (actual) costs, which is our focus. However, by using the quasi-predicted PFAD costs, we can decompose this difference into its two main components.

First, by obtaining the difference between PFAD and the predicted costs, we determine the effect of data inaccuracy from the budgeting process:

Effect of source data inaccuracy = PFAD – Predicted cost

The second component can be calculated by determining the disparity of the PFAD and the actual cost figures. This difference gives us important information about the model's predictive ability without the noise caused by imprecise inputs.

Effect of the model's method = Actual cost – PFAD

Summing the component effects determines the model's total inaccuracy:

Effect of source data inaccuracy + Effect of the model's method = *(PFAD cost – Predicted cost) + (Actual cost – PFAD cost) = Actual cost – Predicted cost =* ***Model's total inaccuracy***

As we will see in the Results section of this chapter, these two component effects sometimes occur in the same direction (i.e., both underestimate or both overestimate) and combine to increase the total difference. Other times they have opposite effects, resulting in a smaller total difference than would be observed by summing the absolute values of the component effects.

This decomposition method sheds light on problems that are hidden from the observer who only takes into account the total inaccuracy of the model. However, due to the natural variation of actual costs, improving either the accuracy of the source data or the model's predictive ability will not guarantee improvement in individual years.

B. APPLICATION

Our project focuses on improving the model's method (reducing the second component effect), but we will discuss some input precision (first component) issues. In the second part of the Results section, we use hypothesis testing and the Mean Absolute Percentage Error (MAPE) to examine the difference between the PFAD and actual costs.

1. Hypothesis Test

For our analysis, we want to see if the differences between actual costs and model predictions are in effect random deviation, or if the differences are statistically significant and a pattern exists in these differences. The null hypothesis is: the mean of the differences (Actual – PFAD) is zero; while the alternative hypothesis is that it is not zero:

$$H_0: \mu = 0$$

$$H_1: \mu \neq 0$$

where μ is the real mean that we do not know, but estimate as $\overline{X}$. We selected the percentage error as the basic unit for the test, since it is comparable across ship classes as well as years. We calculated p-values for determining the probability of making a Type I error [2] (rejecting the null hypothesis when it is true). The p-value is derived from the t-statistic, calculated the following way:

[2] Albright, Winston, Zappe; Data Analysis & Decision Making with Microsoft Excel; Duxbury Press, 2002; p. 441.

$$t - value = \frac{\overline{X} - \mu}{s / \sqrt{n}}$$

where s is the sample standard deviation, and n is sample size.

The p-value is then determined by using a t-distribution table (degrees of freedom equals n-1) and the assumption of a two-tailed test, since we are interested in probable differences on both ends of the distribution (positive or negative). From the obtained p-value, we can either reject the null hypothesis (which implies that the mean of the differences is not zero, so the model estimates values inaccurately) or accept the null hypothesis (which produces an overall good prediction or insufficient evidence of the opposite).

2. Mean Absolute Percentage Error (MAPE)

The second method, the MAPE, is more frequently used for evaluating the accuracy of forecasting models. It is the average of the prediction's absolute percentage error. It has an advantage of using absolute values for comparison, which eliminates the offsetting effect of opposing (positive and negative) component differences. The MAPE is an absolute value, which can be objectively applied for comparing the relative strength of different forecasting models. But its disadvantage comes from the fact that it is a subjective measure when used without a benchmark for comparison.

C. RESULTS

To demonstrate our evaluation of the current model we will analyze the Pacific Fleet DDG-51 ship class for FY 2002. Excluding CT and NSI costs, the model predicts the total O&M,N cost fairly well (see Figure 4). The model overestimated the costs by approximately $17.7 million ($113.1M - $95.4M), which is an 18.6% inaccuracy relative to the actual cost. The component effects are similar, as most of the cost elements exceeded the estimated values.

	SF	SU	SR	SO	Total		
Actual	$47,841	$12,553	$23,849	$11,147	$95,390		
Predicted	$58,175	$11,612	$27,410	$15,931	$113,128		
Predicted from All Actual Data	$54,834	$11,251	$28,498	$15,660	$110,242		
Actual - Predicted	-$10,334	$941	-$3,561	-$4,784	-$17,738	-18.60%	-> model total inaccuracy
- Pred. fr Actual - Predicted	-$3,342	-$361	$1,088	-$271	-$2,886	-3.03%	-> source data inaccuracy
- Actual - Pred. Fr Actual	-$6,993	$1,302	-$4,649	-$4,513	-$14,852	-15.57%	-> model inaccuracy

Figure 4: Cost Summary for Pacific Fleet DDG-51 Ship Class FY 2002

SF, which has the largest weight in O&M,N costs (in this case 50.2%), was estimated with a fair result (see Figure 5, 21.6% difference between the predicted and actual costs).

SF	value	Full effect	Part effect		Weight
Actual	$47,841	-$10,334		-21.60%	50.15%
Predicted	$58,175		-$3,342	-6.98%	
Predicted from All Actual Data	$54,834		-$6,993	-14.62%	
- Predicted w/ actual *DUWs*	$52,880		-$5,039	-10.53%	
- Predicted w/ actual *Burn Rates*	$59,035		-$11,194	-23.40%	
- Predicted w/ actual *Fuel Prices*	$58,175		-$10,334	-21.60%	

Predicted	*vs.*	*Actual*	difference%
2,402	vs.	2,170	-10.70%
1,239	vs.	1,254	1.20%
40.32	vs.	40.32	0.00%

Figure 5: Prediction Analysis of Pacific Fleet DDG-51 Ship Class Fuel Cost for FY 2002

Applying the decomposition method to these results uncovers some of the reasons for the difference between actual and predicted costs. The reason for inaccuracies in fuel (SF) cost estimates is not as straightforward as the distinction between model error and source data error. Since analyzing SF cost prediction is not our primary focus, we will briefly review the results.

Figure 5 shows the effect of the source data inaccuracy that at 6.98%, seems reasonable. This is true in the case of burn rates and fuel prices, but less convincing in the number of days underway. Fuel price is the same as predicted, since ships use a predetermined fixed price throughout the year and burn rates do not change significantly over time.

SU	value	Full effect	Part effect		Weight
Actual	$12,553	$941		7.50%	13.16%
Predicted	$11,612		-$361	-2.87%	
Predicted from All Actual Data	$11,251		$1,302	10.37%	
- Predicted w/ actual *price growth*	$11,664		$889	7.08%	
- Predicted w/ actual *OPMONTH*	$11,200		$1,353	10.77%	

Predicted	*vs.*	*Actual*	difference%
132.60%	vs.	133.20%	0.45%
180.70	vs.	174.30	-3.67%

SR	value	Full effect	Part effect		Weight
Actual	$23,849	-$3,561		-14.93%	25.00%
Predicted	$27,410		$1,088	4.56%	
Predicted from All Actual Data	$28,498		-$4,649	-19.49%	
- Predicted w/ actual *price growth*	$27,870		-$4,021	-16.86%	
- Predicted w/ actual *ship year*	$26,972		-$3,123	-13.09%	
- Predicted w/ actual *incr. cost*	$28,483		-$4,634	-19.43%	

Predicted	*vs.*	*Actual*	difference%
98.40%	vs.	99.99%	1.59%
16.25	vs.	16.00	-1.56%
-1,073	vs.	0	#DIV/0!

SO	value	Full effect	Part effect		Weight
Actual	$11,147	-$4,784		-42.92%	11.69%
Predicted	$15,931		-$271	-2.43%	
Predicted from All Actual Data	$15,660		-$4,513	-40.48%	
- Predicted w/ actual *price growth*	16,324		-$5,177	-46.44%	
- Predicted w/ actual *ship year*	15,692		-$4,545	-40.78%	
- Predicted w/ actual *incr. cost*	15,511		-$4,364	-39.15%	

Predicted	*vs.*	*Actual*	difference%
98.70%	vs.	101.20%	2.47%
16.25	vs.	16.00	-1.56%
419	vs.	0	#DIV/0!

Figure 6: Prediction Analysis of Pacific Fleet DDG-51 Ship Class SU, SR and SO Costs for 2002

In each of the remaining three cases (SU, SR, SO) we can draw similar conclusions. Though the proportion of inaccuracy fluctuates (7.5%, 14.9%, and 42.9% -see Figure 6), all show that original prediction problems stem mainly from the model's calculation method (effects respectively: 10.4%, 19.5%, and 40.5%). Even if the planner had known what was going to happen in the coming year (in terms of the cost drivers and adjustments ship years, operation months price growths, and price growths and incremental costs respectively) using the current model's method, he would have arrived at almost the same result. However, in an individual case it can come from natural variation of costs over time; using across-the-board examples we can determine whether it is a general tendency or not.

For the selected ship classes and for each of the years from 1997 through 2002 we ran comparisons measuring the second component effect (model's inaccuracy). Percentage errors and the calculated measures are summarized in the tables below.

Year / CL	DDG-51CL	CG-47CL	DD-963CL	FFG-7CL	LHA-1CL
1997	-9.39%	-6.49%	-4.34%	-8.87%	18.24%
1998	-12.91%	-0.73%	6.75%	-5.98%	11.30%
1999	1.64%	-2.37%	-3.29%	-0.31%	13.93%
2000	15.36%	22.97%	29.19%	19.41%	16.71%
2001	-5.43%	-4.84%	0.06%	-2.54%	21.00%
2002	-15.57%	-12.35%	-17.20%	-14.55%	-3.51%

Mean =	1.53%
StDev =	12.82%
t-value =	0.65
p-value =	**0.5187**

MAPE =	**10.24%**

Table 2: Prediction Appraisal of Selected Ship Classes' Total Costs

Table 2 shows the overall results obtained by analyzing the selected ship classes' total costs (excluding CT and NSI). The calculated p-value (0.5187) implies strong evidence for not rejecting the null hypothesis, which theoretically means insufficient evidence against H_0, but practically, it yields a good overall result that implies a good model on the total cost level. However, we should highlight the deficiencies of this analysis. By using simple averages we do not take into consideration the different ship classes.

On the other hand, the MAPE shows a fairly good picture. It says, across our sample, the total cost was predicted with an average error of 10%. As mentioned before, there is no objective method to evaluate this number. It is just our perception that determines this as fairly good.

As we will see, the hypothesis test determines whether or not the model makes mistakes systematically or randomly. On the other hand, MAPE gives details about its ex-post precision, regardless of the possible fact that the model was inaccurate more frequently in one direction then the other.

Using the same methodology, we can assess the precision of prediction separately for each cost group. We begin with the fuel cost, see Table 3.

Year / CL	DDG-51CL	CG-47CL	DD-963CL	FFG-7CL	LHA-1CL
1997	3.24%	-7.21%	-3.84%	-34.35%	11.64%
1998	0.94%	5.17%	-0.98%	-30.03%	25.12%
1999	-7.43%	-10.19%	-4.29%	-1.36%	17.40%
2000	54.10%	51.04%	41.89%	51.72%	36.12%
2001	-11.39%	-7.56%	-9.72%	-19.31%	41.49%
2002	-14.62%	-16.82%	-11.86%	-26.00%	15.69%

Mean =	4.62%
StDev =	24.91%
t-value =	1.02
p-value =	**0.3180**

MAPE =	**19.08%**

Table 3: Prediction Analysis of Selected Ship Classes' Fuel Cost

The p-value (0.32) gives quite strong evidence against systemic errors; however, the MAPE shows only a fair result. In certain ship classes (e.g. FFG-7 or LHA-1) this inaccuracy is especially significant and presents systematic patterns (continuous over- and under-estimation respectively). Since this cost group has the most obvious connection to OPTEMPO (e.g. days underway) it is important to note that actual data yield the above results. We feel these results demonstrate the potential for improvement in the prediction of SF cost.

Year / CL	DDG-51CL	CG-47CL	DD-963CL	FFG-7CL	LHA-1CL
1997	16.69%	10.08%	8.99%	11.15%	34.77%
1998	25.30%	12.13%	13.24%	7.84%	-44.10%
1999	7.11%	-9.38%	2.39%	14.95%	12.67%
2000	2.70%	3.39%	2.61%	3.83%	-4.03%
2001	9.36%	-1.86%	2.54%	-5.89%	7.54%
2002	10.37%	14.81%	-11.37%	-0.79%	4.52%

Mean =	5.39%
StDev =	13.32%
t-value =	2.21
p-value =	**0.0348**

MAPE =	**10.55%**

Table 4: Prediction Appraisal of Selected Ship Classes' Utility Cost

Results from the analysis of utility cost are somewhat surprising (see the summary in Table 4). Although the MAPE shows the best results among all cost elements, the p-value indicates systematic problems with the model at 96.5% certainty level. This indicates a statistically significant one-direction deviation from the actual data, which is easily observable by examining a graph like the one in Figure 7.

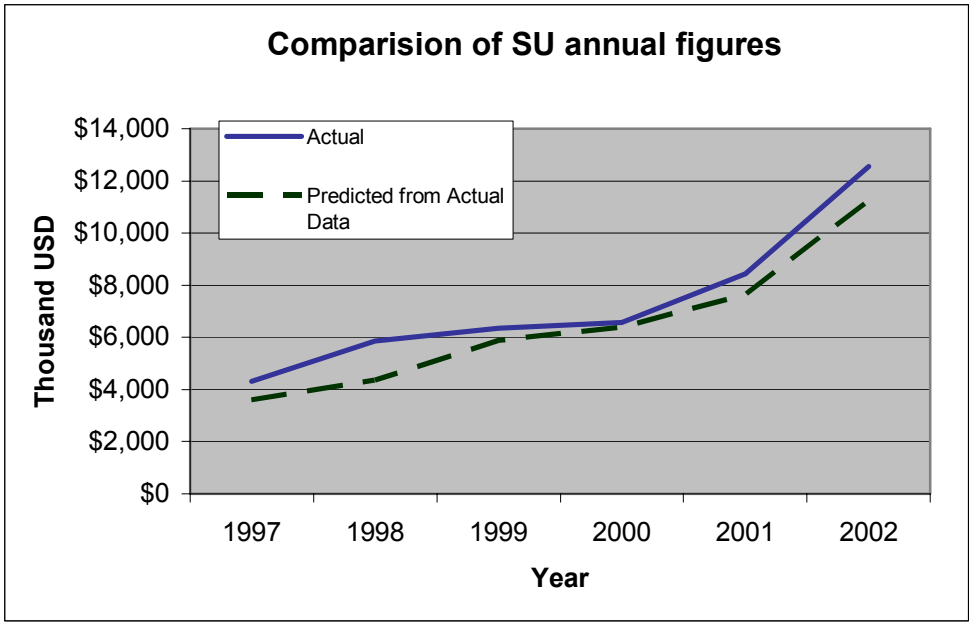

Figure 7: Actual Versus PFAD for Pacific Fleet DDG-51 Ships

As the example above also shows, SU cost is mostly underestimated if we use actual execution data as inputs to the model. This seems to be permanent, as the p-value confirmed, but whether it is intended or not we don't know. An intended flaw might be explained by the commonly used under-financing technique (i.e., 90%) in the beginning of the year (when the model is mainly used) in order not to exceed 100% of the obligations by the end of the year, so as to avoid overspending. If it is not intended, it would be worth analyzing more closely. In our view, we think we are observing one of the disadvantages of moving average, which happens if there is a continuous upward or downward trend in the data, where moving average under- and over-estimates respectively. Correcting this would probably not require big changes in the model (just adding the average difference to the prediction in the case of underestimation), but it will work properly while the (upward) trend continues, otherwise it would have the opposite effect by causing further inaccuracies if the trend reverses. The planners probably have more information about future trends based on which they can decide whether or not they are better off with the correction.

Year / CL	DDG-51CL	CG-47CL	DD-963CL	FFG-7CL	LHA-1CL
1997	-24.42%	1.59%	1.87%	9.55%	36.91%
1998	-55.64%	-19.26%	4.87%	8.15%	-15.24%
1999	-2.52%	-4.39%	2.82%	7.80%	-10.94%
2000	1.59%	18.78%	25.65%	3.45%	20.70%
2001	0.60%	-0.17%	-1.12%	-5.79%	6.82%
2002	-19.49%	-13.95%	-30.57%	-17.89%	-51.00%

Mean =	-4.04%
StDev =	19.94%
t-value =	1.11
p-value =	**0.2763**

SR

MAPE =	**14.12%**

Year / CL	DDG-51CL	CG-47CL	DD-963CL	FFG-7CL	LHA-1CL
1997	-44.46%	-41.52%	-35.06%	-10.34%	-18.13%
1998	-11.16%	6.50%	28.34%	6.07%	26.85%
1999	23.85%	24.20%	-17.26%	-25.70%	23.09%
2000	-57.40%	-21.66%	22.98%	6.54%	5.64%
2001	-6.17%	-9.47%	25.24%	29.83%	8.95%
2002	-40.48%	-17.52%	-16.03%	6.82%	-22.95%

Mean =	-5.01%
StDev =	24.82%
t-value =	1.11
p-value =	**0.2775**

SO

MAPE =	**21.34%**

Table 5: Prediction Analysis of Selected Ship Classes' SR and SO Cost

We will discuss the last two cost elements together, because they are calculated using the same method, namely based on ship years (number of ships in commissioned status in a given year). As shown in Table 5, their p-values are very similar, at a minimum showing a lack of sufficient evidence against systematic errors. Despite the fact that this statistical test that shows the errors are evenly distributed, there are significant inac-

curacies, especially in the prediction of SO. These fairly high (in our judgment) MAPE results underpin the need for some improvement in these cases.

Comparison of results across cost elements is debatable due to the different characteristics of spending. But, comparing MAPE results indicates the possibility of improving cost estimation in the last two cases by incorporating some kind of operational data into the model.

After analyzing the current techniques to determine predicted costs at the special interest item and ship class level, the next chapter is our attempt to improve upon the current methods of prediction.

V. MODIFIED MODEL PROPOSAL

A. INTRODUCTION

In this section we will discuss our findings for developing a modified Ship Ops model. As previously stated, our research focuses on improving the predictive capability of the current model in the Special Interest Items of SR (Repair Parts) and SO (OPTAR, Other). We will use as a benchmark for comparison the Mean Absolute Percentage Error (MAPE) analysis completed in Chapter IV. Our modified model will be compared against the current model to determine whether we have succeeded in improving the model's predictive capability.

The primary flaw with the current model is that there are no cost drivers other than Ship Years. In essence the model treats all costs as fixed, based on a ship being in commission during a given year. Our modified model seeks to identify the fixed cost (a constant in the cost equation) and cost drivers related to operations that could reveal the underlying variable cost of operating ships. In order to do this we have collected operational information from the NEURS database which identifies a ship's days underway. Further segregation of the data is possible when one considers the OPCON information found in the NEURS database.

In the event we could not determine a relationship between costs and operational variables, we looked to improve on the current model's MAPE by finding relationships between cost data and fiscal year (FY). In most ship classes, we determined a statistically significant relationship exists between costs and the FY. This is especially relevant given the uncertainty surrounding the current inflation factors (discussed in Chapter III). By using FY as an independent variable, we are able to incorporate the historically realized rate of inflation without inputting an arbitrary inflation factor.

In selecting which regressions to use in our modified model, we chose the equation that resulted in the lowest MAPE. In some cases, we were unable to find a relationship between costs and operational data. In other cases, we found marked improvement by including operational data as drivers for forecasting costs. Our modified model incorporates these improvements, where available, with the current method of using three-year averages. We have determined that for SR, our modified model demonstrates

averages. We have determined that for SR, our modified model demonstrates its improvement over the current model through its lower overall MAPE (13.39% for the modified model vs. 20.27% for the current model) as well as a MAPE for each ship class that is lower or equal to the current model. For SO, we were unable to produce significant improvement in MAPE when compared with the original model.

B. DEVELOPING THE MODIFIED MODEL

This section (Tables 7 and 8) presents the regressions that were found to have the lowest MAPE for each of the ship classes analyzed. Regressions were run to find relationships between repair parts (SR) cost, consumable (SO) costs and operating data. An independent variable for the year was considered. Referred to as "FY," this variable aimed to include trends from year to year, to include inflation. An indicator variable was included to differentiate between Pacific and Atlantic Fleet ships when regressions were run on all the ships of a class. This variable was referred to as "Pac Flt." This variable has a value of either "1" for a Pacific Fleet ship or "0" for an Atlantic Fleet ship. This variable was not included when the regressions were done for the individual fleets since it was not required.

Based on the information in the NUERS database, five possible independent variables could be considered. The first was days underway while not deployed and was identified as "UW not dep." There were three variables to consider for days underway while deployed. Days underway deployed to the Fifth Fleet Area of Responsibility (AOR) are identified separately in the NUERS database by OPCON code 17. The variable representing this is "code 17" in the following regressions. When ships were deployed but not to the Fifth Fleet AOR, these days were represented by the variable "UW dep not 17." Finally, the variable "Total UW deployed" is the summation of the previous two variables. The last variable "Total UW" considers the total number of days underway deployed and not deployed.

Some exceptions apply. Due to the lack of data points, regressions by class do not consider whether a ship is deployed to the Fifth Fleet or not, only that it is underway deployed. Further, in order to keep with the model's current convention of computing

unit cost for SR and SO and then multiplying by the number of Ship Years, we have decided to use the dependant variable SR per ship (or SO per ship) when determining the equation to predict costs by class.

To summarize, the variables used in the following regressions and their meanings are as follows:

Dependent Variables	
SR	A dependent variable to estimate repair parts costs for a ship in the class when using "by hull" data.
SO	A dependent variable to estimate SO for a ship in the class consumable costs for a ship in the class when using "by hull" data.
SR per ship	A dependent variable to estimate SR costs when using class data.
SO per ship	A dependent variable to estimate SO costs when using class data.
Independent Variables	
FY	An independent variable representing the current fiscal year. Fiscal Year 2000 was used as the base (00). Therefore fiscal year 1999 is represented by a negative one (-1) and fiscal year 2001 by a positive one (1).
Pac Flt	A binary (one or zero) indicator variable to represent the fleet in which a ship is home ported. A ship assigned to the Atlantic Fleet would have a value of zero and one assigned to the Pacific Fleet would have a value of one.
UW not dep	Represents the days spent underway and while not in a deployed status. In the NUERS database this is represented by the time spent in code eight.
Code 17	Represents the days underway on deployment while in the 5th Fleet AOR. This time is represented by code 17 in the NUERS database.
UW dep not 17	Represents the days spent underway and on deployment when operating in areas SO than the 5th fleet AOR. This is represented by the code nine in the NUERS database.
Total UW deployed	Is the summation of the days under "Code 17" and "Total UW deployed." This represents the total number of days underway while in a deployed status.
Total UW	Represents the total number of days a ship was underway in a year. It is the summation of the time spent in codes eight, nine and seventeen in the NUERS database.
Total UW / SY	The total days underway for a class during a year divided by the ship years. This represents the average number of days underway per ship.

Table 6: Variables used in Regressions

Multiple regressions were run in Minitab (a commercial statistical software package) to consider the various combinations of these variables. In order to find any relationships that exist across an entire class, the ships were aggregated by class and fleet. Then the ships were divided into their respective fleets and further regressions were performed to find any relationships that were fleet specific.

There are a few exceptions to this practice. Only ships from the Atlantic Fleet were considered for the CVN-68 class. Data for the Pacific Fleet ships of this class were not available. The MCM class does not have ships assigned to the Pacific Fleet. Ships are home ported in the Atlantic Fleet, Bahrain, and Japan. Although assigned to Japan, for budgeting purposes these ships are considered part of the Atlantic Fleet. Regressions performed on this class of ship were separated by homeport: Atlantic, Bahrain, and Japan. The MHC class had a similar issue since these ships are only home ported in Bahrain. Detailed analysis of regressions can be found in the appendices of our full MBA report.

C. EVALUATING OUR MODEL

We established which classes of ships have demonstrated a significant relationship to either an operational variable (days underway) or a sequential variable (FY). We constructed our modified model based on the premise that if we lower the MAPE for any portion of the model we improve the predictive capability of the model. With that in mind, Tables 7 and 8 demonstrate which classes (in which fleets) have a statistically significant relationship with a variable not included in the current model that could improve the predictive capability over the current model.

SO	Best Value	Best Method	Best Method Equation
Atlantic Fleet			
AOE-1CL	10.10%	Original Model	3-year average
AOE-6CL	15.10%	Regression by HULL	SO = 389230 - 95086 FY + 2493 Total UW
MHC-51CL	30.80%	Regression by HULL Combined	SO = 191950 + 46602 FY
LHA-1CL	7.10%	Regression by Class	SO per ship = 2457.304 + 118.0714 FY
LHD-1CL	9.40%	Regression by Class	SO per ship = 2281.057 + 125.4181 FY
LPD-4CL	10.30%	Regression by HULL	SO = 753710 + 49124 FY
LSD-36CL	27.50%	Regression by HULL Combined	SO = 869294 + 226643 FY
LSD-41CL	20.50%	Regression by HULL Combined	SO = 384471 + 46986 FY + 370971 Pac Flt + 1803 Total UW
CG-47CL	6.40%	Regression by Class	SO per ship = 868.7925 + 36.67772 FY
DDG-51CL	6.70%	Regression by Class	SO per ship = 711.387 + 18.74133 FY
DD-963CL	6.00%	Regression by Class	SO per ship = 754.3822 + 18.24094 FY
FFG-7CL	3.70%	Regression by Class	SO per ship = 617.0314 + 24.24533 FY
ARS-50CL	7.00%	Regression by Class	SO per ship = 469.818 + 45.26488 FY
CVN-68CL	9.52%	Original Model	3-year average
Pacific Fleet			
AOE-1CL	*16.87%*	*Original Model*	3-year average
AOE-6CL	*19.90%*	*Regression by HULL Combined*	*SO = 230024 + 585647 Pac Flt + 3912 Total UW*
LHA-1CL	*10.50%*	*Regression by Class*	*SO per ship = 1442.206 + 184.4804 FY + 12.8445 Total UW / SY*
LHD-1CL	*14.70%*	*Regression by Class Combined*	*SO per ship = 2399.275 + 172.722 FY + 447.1553 Pac Flt*
LPD-4CL	*7.30%*	*Regression by Class*	*SO per ship = 1333.153 + 81.15278 FY*
LSD-36CL	*13.80%*	*Regression by Class*	*SO per ship = 1124.714 + 85.91071 FY*
LSD-41CL	*19.00%*	*Regression by HULL*	*SO = 513888 + 3846 Total UW*
CG-47CL	*14.30%*	*Regression by HULL Combined*	*SO = 519990 + 70221 FY + 244877 Pac Flt + 1061 Total UW*
DDG-51CL	*20.80%*	*Regression by HULL*	*SO = 126572 + 40860 FY + 4890 UW N.D. + 5099 UW Depl.Not 17+ 3320 Code 17*
DD-963CL	*14.40%*	*Regression by Class Combined*	*SO per ship = 876.4264 + 42.34407 FY*
FFG-7CL	*10.60%*	*Regression by Class Combined*	*SO per ship = 704.0872 + 36.86082 FY*
ARS-50CL	*11.80%*	*Regression by Class Combined*	*SO per ship = 473.4271 + 46.69583 FY + 231.9125 Pac Flt*
CVN-68CL	*20.00%*	*Original Model*	3-year average

Table 7: Best MAPE by Type of Regression SO

SR	Best Value	Best Method	Best Method Equation
Atlantic Fleet			
AOE-1CL	9.84%	Original Model	3-year average
AOE-6CL	12.60%	Regression by Class	SR per ship = 1667.023 + 92.30497 FY
MCM-1CL	13.37%	Original Model	3-year average
MHC-51CL	40.00%	Regression by HULL Combined	SR = 492140 + 164273 FY
LHA-1CL	15.20%	Regression by Class Combined	SR per ship = 2148.285 + 91.33448 FY
LHD-1CL	8.63%	Original Model	3-year average
LPD-4CL	10.74%	Original Model	3-year average
LSD-36CL	17.94%	Original Model	3-year average
LSD-41CL	12.84%	Original Model	3-year average
CG-47CL	9.90%	Original Model	3-year average
DDG-51CL	8.90%	Regression by Class	SR per ship = 1328 – 98.0074 FY
DD-963CL	4.40%	Regression by Class	SR per ship = 1958.267 + 65.34286 FY
FFG-7CL	3.00%	Regression by Class	SR per ship = 1450.977 + 43.07232 FY
ARS-50CL	11.90%	Regression by HULL	SR = 414091 + 48712 FY
CVN-68CL	26.90%	Regression by HULL	SR = 3332599 + 731389 FY + 23395 Total UW
Pacific Fleet			
AOE-1CL	*19.60%*	*Regression by HULL Combined*	*SR = 1582192 + 210046 FY - 446790 Pac Flt*
AOE-6CL	*14.70%*	*Regression by HULL Combined*	*SR = 461317 - 290374 Pac Flt + 10861 UW not dep + 5132 Total UW deployed*
LHA-1CL	*14.40%*	*Regression by Class*	*SR per ship = 2349.507 + 176.3022 FY*
LHD-1CL	*10.26%*	*Original Model*	*3-year average*
LPD-4CL	*11.65%*	*Original Model*	*3-year average*
LSD-36CL	*2.80%*	*Regression by HULL*	*SR = 132195 + 210146 FY + 6100 UW not dep + 3526 Total Dep UW*
LSD-41CL	*17.00%*	*Regression by HULL*	*SR = 881305 - 56488 FY*
CG-47CL	*9.69%*	*Original Model*	*3-year average*
DDG-51CL	*10.40%*	*Original Model*	*3-year average*
DD-963CL	*9.10%*	*Regression by Class*	*SR per ship = 2033.559 + 122.1649 FY*
FFG-7CL	*4.90%*	*Regression by Class*	*SR per ship = 1328.088 + 53.5 FY*
ARS-50CL	*13.60%*	*Regression by HULL Combined*	*SR = 414091 + 57674 FY + 252672 Pac Flt*
CVN-68CL	*22.23%*	*Original Model*	*3-year average*

Table 8: Best MAPE by Type of Regression SR

We have demonstrated that in some cases the current model is the most accurate means of predicting costs (lower MAPE or no significant regressions were found), while in other cases a driver other than ship years is more appropriate. Tables 9 and 14 show the actual cost by class and fleet, the PFAD (the best possible output of the current model), and the modified model's predicted cost for 2002, 2001 and 2000.

SR - 2002	Actual Cost	Weighting	PFAD	PFAD Weighted MAPE	Best Method's Prediction	Best Method's Weighted MAPE
Atlantic Fleet						
AOE-1CL	$3,343	0.99%	$3,092	0.08%	$3,092	0.08%
AOE-6CL	$792	0.23%	$1,113	0.07%	$1,111	0.07%
MCM-1CL	$9,176	2.72%	$7,223	0.74%	$7,223	0.74%
MHC-51CL	$1,316	0.39%	$2,761	0.20%	$1,641	0.08%
LHA-1CL	$6,846	2.03%	$4,248	1.24%	$4,662	0.95%
LHD-1CL	$9,015	2.67%	$9,327	0.09%	$9,327	0.09%
LPD-4CL	$4,351	1.29%	$4,129	0.07%	$4,129	0.07%
LSD-36CL	$876	0.26%	$790	0.03%	$790	0.03%
LSD-41CL	$6,714	1.99%	$5,032	0.67%	$5,032	0.67%
CG-47CL	$40,254	11.94%	$36,397	1.27%	$36,397	1.27%
DDG-51CL	$28,455	8.44%	$25,821	0.86%	$21,055	2.97%
DD-963CL	$21,029	6.24%	$20,728	0.09%	$21,934	0.26%
FFG-7CL	$22,554	6.69%	$21,235	0.42%	$23,057	0.15%
ARS-50CL	$832	0.25%	$740	0.03%	$1,023	0.05%
CVN-68CL	$32,033	9.50%	$24,269	3.04%	$26,715	1.89%
Pacific Fleet						
AOE-1CL	*$2,682*	*0.80%*	*$2,107*	*0.22%*	*$3,111*	*0.11%*
AOE-6CL	*$2,414*	*0.72%*	*$2,086*	*0.11%*	*$2,493*	*0.02%*
LHA-1CL	*$5,226*	*1.55%*	*$7,891*	*0.52%*	*$8,106*	*0.55%*
LHD-1CL	*$7,068*	*2.10%*	*$7,499*	*0.12%*	*$7,499*	*0.12%*
LPD-4CL	*$5,178*	*1.54%*	*$5,852*	*0.18%*	*$5,852*	*0.18%*
LSD-36CL	*$1,943*	*0.58%*	*$1,690*	*0.09%*	*$2,488*	*0.13%*
LSD-41CL	*$4,899*	*1.45%*	*$5,749*	*0.21%*	*$3,842*	*0.40%*
CG-47CL	*$32,843*	*9.74%*	*$37,424*	*1.19%*	*$37,424*	*1.19%*
DDG-51CL	*$23,849*	*7.08%*	*$28,498*	*1.15%*	*$28,498*	*1.15%*
DD-963CL	*$17,310*	*5.14%*	*$22,602*	*1.20%*	*$21,412*	*0.98%*
FFG-7CL	*$13,580*	*4.03%*	*$16,010*	*0.61%*	*$15,786*	*0.56%*
ARS-50CL	*$1,191*	*0.35%*	*$1,547*	*0.08%*	*$1,564*	*0.08%*
CVN-68CL	*$31,301*	*9.29%*	*$29,518*	*0.56%*	*$29,518*	*0.56%*
WEIGHTED MAPE				**15.14%**		**15.39%**
LANTFLEET SUM	$187,586		$166,906		$167,188	
PACFLEET SUM	*$149,484*		*$168,472*		*$167,592*	
TOTAL SUM	$337,070		$335,378		$334,780	

Table 9: MAPE Comparison for PFAD and the Mod. Model SR 2002

SR - 2001	Actual Cost	Weighting	PFAD	PFAD Weighted MAPE	Best Method's Prediction	Best Method's Weighted MAPE
Atlantic Fleet						
AOE-1CL	$3,029	0.95%	$3,009	0.01%	$3,009	0.01%
AOE-6CL	$3,027	0.95%	$2,798	0.08%	$2,991	0.01%
MCM-1CL	$6,177	1.93%	$7,724	0.39%	$7,724	0.39%
MHC-51CL	$6,001	1.87%	$449	23.20%	$1,313	6.70%
LHA-1CL	$3,863	1.21%	$4,317	0.13%	$4,479	0.17%
LHD-1CL	$7,655	2.39%	$7,147	0.17%	$7,147	0.17%
LPD-4CL	$3,858	1.21%	$4,191	0.10%	$4,191	0.10%
LSD-36CL	$676	0.21%	$819	0.04%	$819	0.04%
LSD-41CL	$3,963	1.24%	$5,210	0.30%	$5,210	0.30%
CG-47CL	$38,524	12.04%	$33,635	1.75%	$33,635	1.75%
DDG-51CL	$23,959	7.49%	$25,786	0.53%	$21,648	0.80%
DD-963CL	$25,002	7.81%	$21,155	1.42%	$23,069	0.65%
FFG-7CL	$25,607	8.00%	$22,486	1.11%	$23,905	0.57%
ARS-50CL	$395	0.12%	$739	0.06%	$926	0.07%
CVN-68CL	$7,251	2.27%	$33,458	1.77%	$26,830	1.65%
Pacific Fleet						
AOE-1CL	*$2,859*	*0.89%*	*$1,655*	*0.65%*	*$2,691*	*0.06%*
AOE-6CL	*$2,317*	*0.72%*	*$1,839*	*0.19%*	*$2,872*	*0.14%*
LHA-1CL	*$7,650*	*2.39%*	*$7,129*	*0.17%*	*$7,577*	*0.02%*
LHD-1CL	*$6,279*	*1.96%*	*$7,122*	*0.23%*	*$7,122*	*0.23%*
LPD-4CL	*$6,006*	*1.88%*	*$5,653*	*0.12%*	*$5,653*	*0.12%*
LSD-36CL	*$1,656*	*0.52%*	*$1,659*	*0.00%*	*$1,665*	*0.00%*
LSD-41CL	*$5,269*	*1.65%*	*$5,165*	*0.03%*	*$3,299*	*0.98%*
CG-47CL	*$35,017*	*10.94%*	*$35,075*	*0.02%*	*$35,075*	*0.02%*
DDG-51CL	*$23,462*	*7.33%*	*$23,320*	*0.04%*	*$23,320*	*0.04%*
DD-963CL	*$22,984*	*7.18%*	*$23,241*	*0.08%*	*$22,635*	*0.11%*
FFG-7CL	*$15,295*	*4.78%*	*$16,181*	*0.26%*	*$15,197*	*0.03%*
ARS-50CL	*$1,520*	*0.47%*	*$1,598*	*0.02%*	*$1,449*	*0.02%*
CVN-68CL	*$30,787*	*9.62%*	*$31,250*	*0.14%*	*$31,250*	*0.14%*
WEIGHTED MAPE				**33.01%**		**15.28%**
LANTFLEET SUM	$158,987		$172,925		$166,897	
PACFLEET SUM	*$161,101*		*$160,886*		*$159,805*	
TOTAL SUM	$320,088		$333,811		$326,702	

Table 10: MAPE Comparison for PFAD and the Mod. Model SR 2001

SR - 2000	Actual Cost	Weighting	PFAD	PFAD Weighted MAPE	Best Method's Prediction	Best Method's Weighted MAPE
Atlantic Fleet						
AOE-1CL	$2,665	0.83%	$2,340	0.12%	$2,340	0.12%
AOE-6CL	$3,067	0.96%	$2,447	0.24%	$3,334	0.08%
MCM-1CL	$7,509	2.35%	$7,570	0.02%	$7,570	0.02%
MHC-51CL	$873	0.27%	$480	0.22%	$984	0.03%
LHA-1CL	$4,208	1.32%	$3,182	0.42%	$4,297	0.03%
LHD-1CL	$5,449	1.70%	$6,125	0.19%	$6,125	0.19%
LPD-4CL	$4,125	1.29%	$3,378	0.29%	$3,378	0.29%
LSD-36CL	$793	0.25%	$743	0.02%	$743	0.02%
LSD-41CL	$4,924	1.54%	$4,800	0.04%	$4,800	0.04%
CG-47CL	$32,430	10.14%	$32,459	0.01%	$32,459	0.01%
DDG-51CL	$21,917	6.85%	$20,220	0.58%	$20,318	0.54%
DD-963CL	$24,236	7.58%	$22,508	0.58%	$25,457	0.36%
FFG-7CL	$22,179	6.94%	$20,814	0.45%	$23,216	0.31%
ARS-50CL	$889	0.28%	$562	0.16%	$828	0.02%
CVN-68CL	$30,087	9.41%	$30,070	0.01%	$27,812	0.77%
Pacific Fleet						
AOE-1CL	*$1,909*	*0.60%*	*$1,446*	*0.19%*	*$2,271*	*0.10%*
AOE-6CL	*$2,685*	*0.84%*	*$1,599*	*0.57%*	*$2,424*	*0.09%*
LHA-1CL	*$8,035*	*2.51%*	*$6,372*	*0.66%*	*$7,049*	*0.35%*
LHD-1CL	*$6,543*	*2.05%*	*$7,725*	*0.31%*	*$7,725*	*0.31%*
LPD-4CL	*$5,490*	*1.72%*	*$5,417*	*0.02%*	*$5,417*	*0.02%*
LSD-36CL	*$1,704*	*0.53%*	*$1,446*	*0.10%*	*$1,534*	*0.06%*
LSD-41CL	*$5,437*	*1.70%*	*$4,448*	*0.38%*	*$4,407*	*0.40%*
CG-47CL	*$35,726*	*11.17%*	*$29,016*	*2.58%*	*$29,016*	*2.58%*
DDG-51CL	*$19,562*	*6.12%*	*$19,250*	*0.10%*	*$19,250*	*0.10%*
DD-963CL	*$25,828*	*8.08%*	*$19,202*	*2.79%*	*$22,369*	*1.25%*
FFG-7CL	*$14,512*	*4.54%*	*$14,011*	*0.16%*	*$14,609*	*0.03%*
ARS-50CL	*$1,744*	*0.55%*	*$1,311*	*0.18%*	*$1,449*	*0.11%*
CVN-68CL	*$25,273*	*7.90%*	*$21,732*	*1.29%*	*$21,732*	*1.29%*
WEIGHTED MAPE				**12.67%**		**9.50%**
LANTFLEET SUM	$165,351		$157,697		$163,663	
PACFLEET SUM	*$154,447*		*$132,975*		*$139,250*	
TOTAL SUM	$319,798		$290,672		$302,913	

Table 11: MAPE Comparison for PFAD and the Mod. Model SR 2000

SO - 2002	Actual Cost	Weighting	PFAD	PFAD Weighted MAPE	Best Method's Prediction	Best Method's Weighted MAPE
Atlantic Fleet						
AOE-1CL	$2,835	1.22%	$3,043	0.08%	$3,043	0.08%
AOE-6CL	$466	0.20%	$767	0.08%	$304	0.11%
MHC-51CL	$848	0.37%	$1,153	0.10%	$570	0.18%
LHA-1CL	$7,378	3.18%	$4,614	1.91%	$5,387	1.18%
LHD-1CL	$11,288	4.87%	$9,699	0.80%	$7,596	2.37%
LPD-4CL	$6,339	2.74%	$5,123	0.65%	$4,260	1.34%
LSD-36CL	$1,525	0.66%	$705	0.77%	$1,323	0.10%
LSD-41CL	$6,855	2.96%	$4,214	1.85%	$4,073	2.02%
CG-47CL	$16,497	7.12%	$12,418	2.34%	$13,202	1.78%
DDG-51CL	$17,606	7.60%	$13,319	2.45%	$11,458	4.08%
DD-963CL	$9,412	4.06%	$8,114	0.65%	$10,281	0.34%
FFG-7CL	$12,952	5.59%	$9,292	2.20%	$10,648	1.21%
ARS-50CL	$1,220	0.53%	$943	0.15%	$1,121	0.05%
CVN-68CL	$40,720	17.57%	$41,281	0.24%	$41,281	0.24%
Pacific Fleet						
AOE-1CL	*$2,601*	*1.12%*	*$2,918*	*0.12%*	*$2,918*	*0.12%*
AOE-6CL	*$2,449*	*1.06%*	*$2,697*	*0.10%*	*$2,742*	*0.11%*
LHA-1CL	*$7,563*	*3.26%*	*$9,299*	*0.61%*	*$10,636*	*0.94%*
LHD-1CL	*$7,112*	*3.07%*	*$8,500*	*0.50%*	*$9,576*	*0.79%*
LPD-4CL	*$6,667*	*2.88%*	*$8,319*	*0.57%*	*$8,973*	*0.74%*
LSD-36CL	*$2,714*	*1.17%*	*$2,351*	*0.18%*	*$2,593*	*0.05%*
LSD-41CL	*$4,794*	*2.07%*	*$6,907*	*0.63%*	*$4,904*	*0.05%*
CG-47CL	*$12,106*	*5.22%*	*$14,227*	*0.78%*	*$11,426*	*0.31%*
DDG-51CL	*$11,147*	*4.81%*	*$15,660*	*1.39%*	*$13,644*	*0.88%*
DD-963CL	*$8,350*	*3.60%*	*$9,688*	*0.50%*	*$10,092*	*0.62%*
FFG-7CL	*$8,465*	*3.65%*	*$7,888*	*0.27%*	*$9,166*	*0.28%*
ARS-50CL	*$1,231*	*0.53%*	*$1,370*	*0.05%*	*$1,597*	*0.12%*
CVN-68CL	*$20,610*	*8.89%*	*$22,157*	*0.62%*	*$22,157*	*0.62%*
				20.58%		**20.70%**
LANTFLEET SUM	$135,941		$114,683		$114,546	
PACFLEET SUM	$95,809		$111,981		$110,424	
TOTAL SUM	$231,750		$226,664		$224,970	

Table 12: MAPE Comparison for PFAD and the Mod. Model SO 2002

Table 13: MAPE Comparison for PFAD and the Mod. Model SO 2001

Table 14: MAPE Comparison for PFAD and the Mod. Model SO 2000

D. RESULTS AND CONCLUSION

From the above data, Table 15 below summarizes the Weighted MAPE for each year.

SR	**PFAD**	**Mod. Model**
2002	15.14%	15.39%
2001	33.01%	15.28%
2000	12.67%	9.50%
Mean	**20.27%**	**13.39%**

SO	**PFAD**	**Mod. Model**
2002	20.58%	20.70%
2001	20.91%	23.41%
2000	19.34%	14.97%
Mean	**20.27%**	**19.69%**

Table 15: Weighted MAPE Summary

The above results demonstrate that the modified model is able to lower the overall MAPE verses the PFAD MAPE for SR. For SO, the modified model is able to lower the MAPE only fractionally. We feel that these results are appropriate given the focus of our study. Though we were able to establish relationships between SR cost and operational data for several ship classes, the optimal MAPE was generally the result of regressions with FY as an independent variable. This relationship replaces the current methodology of three-year average with a regression equation. Though we did not observe the improvement we had hoped for in the SO model, we feel this is caused partially by the nature of spending in this Special Interest Item. SR cost is driven by specific material or inventory deficiency. SO, on the other hand has a tendency to be more discretionary.

Given the above results, we recommend using a regression-based model to predict cost for SR. Further, we also recommend implementation of a regression based model for SO prediction. Though the improvement in MAPE is negligible, the increased flexibility in the modified model represents an improvement worthy of implementation.