NAVAL POSTGRADUATE SCHOOL
Monterey, California

THESIS

A COMMUNICATION LINK SOFTWARE MODEL FOR FLEET NUMERICAL METEOROLOGY AND OCEANOGRAPHY CENTER

by

Douglas J. MacKinnon

December 2000

Thesis Advisor:	John S. Osmundson
Second Reader:	Steven J. Iatrou

Approved for public release; distribution is unlimited.

DTIC QUALITY INSPECTED 4

20001205 046

REPORT DOCUMENTATION PAGE	Form Approved OMB No. 0704-0188

Public reporting burden for this collection of information is estimated to average 1 hour per response, including the time for reviewing instruction, searching existing data sources, gathering and maintaining the data needed, and completing and reviewing the collection of information. Send comments regarding this burden estimate or any other aspect of this collection of information, including suggestions for reducing this burden, to Washington headquarters Services, Directorate for Information Operations and Reports, 1215 Jefferson Davis Highway, Suite 1204, Arlington, VA 22202-4302, and to the Office of Management and Budget, Paperwork Reduction Project (0704-0188) Washington DC 20503.

1. AGENCY USE ONLY *(Leave blank)*	2. REPORT DATE December 2000	3. REPORT TYPE AND DATES COVERED Master's Thesis

4. TITLE AND SUBTITLE: Title (Mix case letters) A Communication Link Software Model for Fleet Numerical Meteorology and Oceanography Center	5. FUNDING NUMBERS
6. AUTHOR: MacKinnon, Douglas J.	
7. PERFORMING ORGANIZATION NAME(S) AND ADDRESS(ES) Naval Postgraduate School Monterey, CA 93943-5000	8. PERFORMING ORGANIZATION REPORT NUMBER
9. SPONSORING / MONITORING AGENCY NAME(S) AND ADDRESS(ES) N/A	10. SPONSORING / MONITORING AGENCY REPORT NUMBER

11. SUPPLEMENTARY NOTES The views expressed in this thesis are those of the author and do not reflect the official policy or position of the Department of Defense or the U.S. Government.

12a. DISTRIBUTION / AVAILABILITY STATEMENT Approved for public release; distribution is unlimited.	12b. DISTRIBUTION CODE

13. ABSTRACT ***(maximum 200 words)***

This thesis develops and provides an accurate simulation model of the communications pathway between Fleet Numerical Meteorology Oceanographic Center (FNMOC) Monterey, California and Naval Atlantic Meteorology Oceanographic Center (NLMOC) Norfolk, Virginia. In order to fulfill its mission to provide global weather forecasts to the warfighter, FNMOC must provide timely data to its customers. This model provides an analytic approach toward determining time delay with respect to bandwidth and its management. Additionally, this model enables the user to analytically determine the effects of hardware changes. Although other customers exist besides NLMOC Norfolk, it is a major consumer of data files in support of weather forecasting. The other major links are located in Rota, Spain; San Diego, California; Yokosuka, Japan; and Peal Harbor, Hawaii. This model is, however, scalable to simulate these other major links. The target audience for this information model is the technical support personnel at FNMOC Monterey, California, who manage the link to NLMOC Norfolk, Virginia. The information that supports this model was derived from field visits to technical personnel at FNMOC Monterey. No other communications software model has been developed at the present time. The discrete event software simulation tool used for this model is Extend™.

14. SUBJECT TERMS Model, Simulation, Network, Bandwidth, Meteorology, Extend™	15. NUMBER OF PAGES 56
	16. PRICE CODE

17. SECURITY CLASSIFICATION OF REPORT	18. SECURITY CLASSIFICATION OF THIS PAGE	19. SECURITY CLASSIFICATION OF ABSTRACT	20. LIMITATION OF ABSTRACT
Unclassified	Unclassified	Unclassified	UL

NSN 7540-01-280-5500

Standard Form 298 (Rev. 2-89)
Prescribed by ANSI Std. 239-18

THIS PAGE INTENTIONALLY LEFT BLANK

Approved for public release; distribution is unlimited

A COMMUNICATION LINK SOFTWARE MODEL FOR FLEET NUMERICAL METEOROLOGY AND OCEANOGRAPHY CENTER

Douglas J. MacKinnon
Lieutenant Commander, United States Navy
B. S., United States Naval Academy, 1985
M. S., Naval Postgraduate School, 1992

Submitted in partial fulfillment of the
requirements for the degree of

MASTER OF SCIENCE IN INFORMATION TECHNOLOGY MANAGEMENT

from the

NAVAL POSTGRADUATE SCHOOL
December 2000

Author: _____
Douglas J. MacKinnon

Approved by: _____
John S. Osmundson, Thesis Advisor

_____
Steven J. Iatrou, Second Reader

_____
Daniel C. Boger, Dean
Computer & Information Sciences & Operations

THIS PAGE INTENTIONALLY LEFT BLANK

ABSTRACT

This thesis develops and provides an accurate simulation model of the communications pathway between Fleet Numerical Meteorology Oceanographic Center (FNMOC) Monterey, California and Naval Atlantic Meteorology Oceanographic Center (NLMOC) Norfolk, Virginia. In order to fulfill its mission to provide global weather forecasts to the warfighter, FNMOC must provide timely data to its customers. This model provides an analytic approach toward determining time delay with respect to bandwidth and its management. Additionally, this model enables the user to analytically determine the effects of hardware changes. Although other customers exist besides NLMOC Norfolk, it is a major consumer of data files in support of weather forecasting. The other major links are located in Rota, Spain; San Diego, California; Yokosuka, Japan; and Peal Harbor, Hawaii. This model is, however, scalable to simulate these other major links. The target audience for this information model is the technical support personnel at FNMOC Monterey, California, who manage the link to NLMOC Norfolk, Virginia. The information that supports this model was derived from field visits to technical personnel at FNMOC Monterey. No other communications software model has been developed at the present time. The discrete event software simulation tool used for this model is Extend™.

THIS PAGE INTENTIONALLY LEFT BLANK

THESIS DISCLAIMER

The reader is cautioned that the computer programs developed in this research may not have been exercised for all cases of interest. While every effort has been made, within the time available, to ensure that the programs are free of computational and logic errors, they cannot be considered validated. Any application of these programs without additional verification is at the risk of the user.

THIS PAGE INTENTIONALLY LEFT BLANK

TABLE OF CONTENTS

I. INTRODUCTION 1
- A. BACKGROUND AND PURPOSE 1
  - 1. FNMOC Monterey 1
  - 2. Extend™ Software 3
- B. OBJECTIVE 5
- C. RESEARCH TOPICS 5

II. FNMOC OPERATIONS 7
- A. DATA GATHERING 7
- B. DATA TRANSMISSION 7
- C. HARDWARE 7

III. MODEL DESCRIPTION 9
- A. OVERVIEW 9
  - 1. Building "Blocks" 9
  - 2. Hierarchy 10
- B. BLOCK DESCRIPTION 10
  - 1. FNMOC Monterey 10
    - *a. NOGAPS* *12*
    - *b. Web Server* *12*
    - *c. For Future Use* *13*
  - 2. Ethernet 17
    - *a. Ethernet Bit Rate Delay* *18*
  - 3. NLMOC Norfolk 19
    - *a. Packet Reception* *20*
  - 4. Output 21

IV. MODEL RESULTS 23
- A. OVERVIEW 23
- B. EXCURSION ONE (T-1 LINE) 23
- C. EXCURSION TWO (10 MEGABITS PER SECOND) 24
- D. EXCURSION THREE (T-1 LINE: HOURLY OUTPUT) 25

V. CONCLUSIONS AND RECOMMENDATIONS 27
- A. CONCLUSIONS 27
  - 1. NLMOC Norfolk 27
- B. RECOMMENDATIONS 27

LIST OF REFERENCES 29

INITIAL DISTRIBUTION LIST 31

THIS PAGE INTENTIONALLY LEFT BLANK

LIST OF FIGURES

Figure 1. FNMOC Monterey Chain of Command (From Ref. 7) 2
Figure 2. Top Model Layer 11
Figure 3. FNMOC Monterey Block (Inputs and Outputs) 12
Figure 4. FNMOC Monterey Block (Message Generation) 13
Figure 5. FNMOC Monterey Block (Message Attributes) 14
Figure 6. FNMOC Monterey Block (Build Packets: First Half) 15
Figure 7. FNMOC Monterey Block (Build Packets: Second Half) 16
Figure 8. Ethernet Block (First Half) 17
Figure 9. Ethernet Block (Second Half) 18
Figure 10. Ethernet Block (Bit Rate Delay) 18
Figure 11. NLMOC Norfolk Block (Packet Reception) 20
Figure 12. NLMOC Norfolk Block (Packets Unpacked) 20
Figure 13. Output Block 21
Figure 14. 1 GB Message Sent Every 12 Hours via T-1 Line (1.544 Mbps) 24
Figure 15. 1 GB Message Sent Every 12 Hours via 10 Mbps Line 25
Figure 16. 83.3 MB Message Sent Every Hour via T-1 Line 26

THIS PAGE INTENTIONALLY LEFT BLANK

LIST OF TABLES

Table 1. Excursion Data 23

THIS PAGE INTENTIONALLY LEFT BLANK

EXECUTIVE SUMMARY

Fleet Numerical Meteorology Oceanographic Center (FNMOC) Monterey, has as its primary mission to provide timely, global weather information to the warfighter. The major customers of this weather information are located in Rota, Spain; San Diego, California; Yokosuka, Japan; Pearl Harbor, Hawaii; and Norfolk, Virginia. Each customer is assigned its own region of the world to forecast and also obtains its own particular data via different paths and at different rates of data transfer.

This thesis develops and provides an accurate simulation model of the communications pathway between Fleet Numerical Meteorology Oceanographic Center (FNMOC) Monterey, California and Naval Atlantic Meteorology Oceanographic Center (NLMOC) Norfolk, Virginia. NLMOC Norfolk was chosen because it is a major consumer of weather data. This model, however, is scalable to simulate these other major links for future study.

To deliver weather data to NLMOC Norfolk, FNMOC Monterey has developed an architecture that ensures a timely response to data requests. There are typically two types of data transfers that take place every day to NLMOC Norfolk. The first type of data transfer is a relatively small update data file. Although requested with a 250 kilobyte file it is typically answered with a smaller size data file of approximately 100 kilobytes. This request and subsequent response occurs approximately every fifteen minutes. The second type of data transfer is extremely large and takes place every twelve hours, also upon request. This data file is produced once all weather observations are received by FNMOC Monterey and subsequently input into the weather forecasting

model. This weather forecasting program produces a very large, one gigabyte file. This file is then sent the NLMOC Norfolk.

All of these messages are sent along the same pathway using Ethernet technology. As a result of Ethernet protocol, every twelve hours no other messages may transfer until the very large database has been fully sent. These data are sent and received at the maximum rate of a T-1 line or 1.544 megabits per second (Mbps). Although this transfer rate is relatively fast, such immense data transfers cause a theoretical minimum system delay of approximately one hour and twenty-eight minutes. This system delay occurs every twelve hours. This data transfer rate and its associated delay are the focus of this thesis.

The pathway used to transfer data is a commercially obtained leased line. It is therefore, always available to both FNMOC and NLMOC without interruption or requests from other customers. Although the path between Monterey and Norfolk is exclusive, there still exist other limitations. The maximum data rate for this line is limited by the rate at which NLMOC Norfolk can receive data. NLMOC's server allows data transfer rates as high as a T-1 line (1.544 Mbps), however this same server provides email and outbound data transfer services as well. This causes the true inbound rate from FNMOC Monterey to be limited to approximately 0.56 Mbps or 36 percent of maximum T-1 line speed.

The model is used to develop and analyze three scenarios. The first demonstrates the transfer of typical data at the maximum theoretical T-1 line rate of 1.544 Mbps. Its subsequent time delay is found to equal one hour and twenty-eight minutes. Unfortunately NLMOC Norfolk routinely experiences data delays of four hours every

time the one gigabyte transfer occurs. Their using this same server for other purposes such as outbound customer traffic causes this further delay over the maximum theoretic time delay. This delay could however, be greatly decreased if NLMOC Norfolk purchased an additional server solely dedicated to receiving data from FNMOC Monterey.

The second scenario determines typical time delays if the entire line bandwidth were increased to 10 megabits per second, which is the current rate at which FNMOC Monterey is able to transmit data. To achieve this, more bandwidth would have to be purchased by NLMOC Norfolk through expanding the current lease agreement. At 10 megabits per second however, the time delay caused by a one gigabyte message would be decreased to 13.3 minutes.

The third scenario demonstrates expected time delays if the one gigabyte data file were managed differently and therefore allowed to be transferred in parts once every hour, equally spread over the standard twelve hour time period. Using the T-1 line already in place, the time delay would be decreased to 7.2 minutes every hour of transmission. This change could be realized through a management alteration to the outbound data.

Each scenario invokes a monte-carlo algorithm to allow for actual, unforeseen message delays. Each message transfer time is sampled from a standard normal distribution using its particular mean time to send and a standard deviation of five seconds.

The discrete event software simulation tool chosen for this model is Extend™, developed by *Imagine That, Incorporated* in San Jose, California. Originally fielded in

the early 1990's, Extend™ provides the user with tools to develop a rigorous simulation on a desktop computer. It is fully programmable by the user without third party contributions. It does this by enabling the user to choose item generators, time delays, and queues in such a way that a tailored, numeric simulation can be accurately defined and run.

This software model provides an analytic approach toward determining expected, theoretic time delays with respect to bandwidth and its management. Additionally, this model enables the user to analytically determine the effects of proposed, future hardware changes.

The target audience for this simulation model is the technical support personnel at FNMOC Monterey, California, who manage the link with NLMOC Norfolk, Virginia. The information that supports this model was derived from field visits to technical personnel at FNMOC, Monterey, California.

At the time of this study, no other communications software model had been developed or considered by FNMOC Monterey.

THIS PAGE INTENTIONALLY LEFT BLANK

ACKNOWLEDGMENTS

Special thanks to John Osmundson and Steve Iatrou who each offered so much help and enthusiasm for this project. I also thank the dedicated personnel at FNMOC Monterey, California, Sam Lloyd, Sherryl Panek and Dave Huff, who never stopped answering my questions, however mundane.

To my wife, whose idea it was to come to Monterey, and our two little girls, your constant devotion and unselfish love made this project worthwhile.

To my Lord and Savior Jesus Christ, no words get written without You.

I. INTRODUCTION

A. BACKGROUND AND PURPOSE

In today's environment of constantly improving rates of data transfer and potentially lower costs through system improvements, the potential to upgrade a system is very high. Therefore, an analytic method to predetermine outcomes and demonstrate effects of potential hardware and software alterations must be developed and used regularly.

One such method is a simulation model. This model must be capable of being scalable and alterable to conform well to current system parameters. It should also be capable of allowing the input of actual data as well as allow for random number generation in order to produce the most realistic outcomes. All of this is done so that important decisions concerning system improvements can be made wisely by those who employ it before embarking on the new change.

1. FNMOC Monterey

Fleet Numerical Meteorology and Oceanography Center (FNMOC) is located at the Naval Postgraduate School Annex on Airport Road, Monterey, California. It is supported by 267 individuals, of whom 95 are military and 172 are civilian. FNMOC provides around-the-clock operational oceanographic and meteorological support to the Department of Defense, U.S. Navy, other U.S. Government agencies, and elements of the armed forces of allied nations. It is a third-echelon command under the Chief of Naval Operations (CNO), Oceanographer of the Navy, located at the Naval Observatory in Washington, DC, and the Commander, Naval Meteorology and Oceanography Command

(CNMOC), located at Stennis Space Center (SSC), Mississippi. FNMOC works with its four other third-echelon commands that include the other production data center at SSC, Naval Oceanographic Office (NAVO), Naval Ice Center (NAVICE), Suitland, Maryland, and three theater Meteorology and Oceanography (METOC) centers: Naval Pacific METOC Center (NPMOC West) at Pearl Harbor, Hawaii; Naval Atlantic METOC Center (NLMOC) at Norfolk, Virginia; and Naval European METOC Center (NEMOC) at Rota, Spain. Figure 1 illustrates the chain of command. FNMOC also has two detachments (FNMOD's) that provide climatology support and weather communications coordination. These detachments, which are located in Asheville, North Carolina, and Tinker Air Force Base (AFB), Oklahoma, support the Navy and the Marine Corps, respectively.

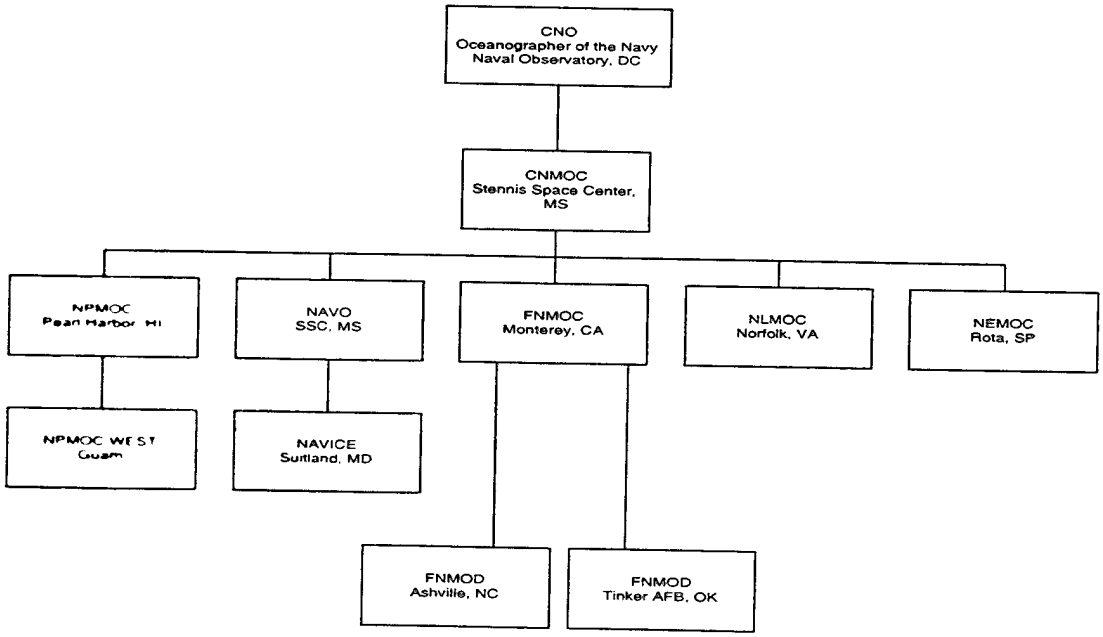

Figure 1. FNMOC Monterey Chain of Command (From Ref. 7)

NLMOC's primary customers are:

- Northern European Meteorology and Oceanography Center (NEMOC) in Rota, Spain
- Naval Atlantic Meteorology and Oceanography Center (NLMOC) in Norfolk, Virginia
- Naval Pacific Meteorology and Oceanography Center (NPMOC) in San Diego, California
- Naval Pacific Meteorology and Oceanography Center (NPMOC WEST) in Pearl Harbor, Hawaii
- Naval Pacific Meteorology and Oceanography Center (NPMOC EAST) in Yokosuka, Japan

This study will focus on the communication link between FNMOC Monterey and NLMOC Norfolk because of the large amount of data that is routinely requested by them.

2. Extend™ Software

The discrete event software simulation tool chosen for this model is Extend™, developed by *Imagine That, Incorporated* in San Jose, California. Originally available for customer use in the early 1990's, Extend™ provides the user with tools to develop a rigorous simulation on a desktop computer. It is fully programmable by the user without third party contributions. It does this by enabling the user to choose item generators, time delays, and queues in such a way that a tailored, numeric simulation model can be accurately defined and run.

Extend™ uses a "drag-and-click" methodology through the use of a many different pre-defined "blocks." This type of Graphical User Interface (GUI) makes the building of models fast and accurate. Most of the "blocks" available for use within Extend™ are used in the model developed for this study; the others were user defined. They will each be explained in the model chapter of this thesis. These blocks can be opened to allow a user to code and thereby implement specific behaviors within that particular block. Many blocks can also be aggregated into one block by selecting the blocks desired and choosing the "make hierarchical" option. This helps to simplify a section of the model, especially when many blocks and their connections are present. The model developed in this study uses this option frequently.

Blocks awaiting use are saved and maintained in separate "libraries." The user opens these libraries as necessary so that the block can be retrieved. Once the blocks are connected and attributes are assigned to each block the model is ready to run. More details concerning blocks and hierarchical design will be discussed in the model description chapter.

Extend™ also provides user output in many forms. For example, a plotter block can be chosen that will automatically graph the desired output. This same output will be used to show the results of the model developed for this thesis. It also provides the numbers that make up the plot so that the user can perform further data analysis if necessary. Additionally Extend™ allows the user to select an animation option, which reveals item location during the simulation. Although it causes the simulation to run much slower it is most helpful in model debugging and demonstration.

B. OBJECTIVE

The objective of this thesis is to provide a simulation model of the connection between NLMOC Norfolk and FNMOC Monterey. This model will allow modifications in order to evaluate the effects of proposed system changes. In particular this model will be able to run on a Pentium III™, 500 megahertz, desktop computer and produce usable output.

C. RESEARCH TOPICS

Research topics explored by this thesis are divided among three excursions. The first excursion will determine the current, minimum theoretic time delay of transferring a one gigabyte message to from FNMOC Monterey to NLMOC Norfolk using a standard T-1 line rate of 1.544 Mbps.

The second excursion demonstrates the minimum theoretic time delay of transferring a one gigabyte message to from FNMOC Monterey to NLMOC Norfolk using an improved bit transfer rate of 10 Mbps. This excursion is extremely useful because NLMOC Monterey is current able to send data at that rate, but NLMOC Norfolk can only receive at 1.544 megabits per second. However, it can upgrade its line speed through expanding its leased line service agreement.

The third excursion demonstrates the effects of parsing the one gigabyte message into twelve equal parts and allowing them to be sent once every hour. The line speed used in this case is 1.544 megabits per second, which is already in place.

THIS PAGE INTENTIONALLY LEFT BLANK

II. FNMOC OPERATIONS

A. DATA GATHERING

FNMOC Monterey receives thousands of observations every day. These observations are input into a very robust program entitled the Naval Operational Global Atmospheric Prediction System (NOGAPS). It has the ability to compare current readings with previously held data and run an algorithm to determine the weather forecast for a particular region.

B. DATA TRANSMISSION

Once the data have been produced by POPS they are placed into geographically "gridded" binary files, referred to as "grib" files. These "grib" files are then sent and stored in an internal database, where they await further transfer once a customer's request is received.

Requests for data arrive from NLMOC Norfolk approximately every fifteen minutes. They are typically 250 kilobytes in size. These requests are answered using recently updated files which are relatively smaller, approximately 100 kilobytes in size.

However, once every twelve hours, NLMOC Norfolk requests that the entire database be updated. Using a 250 kilobyte message, this request is made. It is then answered by sending a large, one gigabyte message containing the entire database.

C. HARDWARE

FNMOC Monterey operates three Cray™ Supercomputers and two OASIS Sun™ Minicomputers in order to run and store its forecast programs and data. Combined with resident switches and routers, this information is received and transferred internally

within FNMOC Monterey at a "Fast Ethernet" speed of 10 Mbps. However, these data are sent externally from FNMOC Monterey at the maximum rate of a T-1 line or 1.544 Mbps. The limiting factor is NLMOC Norfolk's ability to receive data from FNMOC Monterey. NLMOC Norfolk is limited to T-1 line speed for both receiving and sending data. Therefore this model simulates the bandwidth of 1.544 as a starting point in the analysis.

III. MODEL DESCRIPTION

A. OVERVIEW

The model developed for this study simulates an Ethernet operating at different bandwidths and thereby allows message traffic to be transferred at different rates. This model also determines expected, theoretic time delays of message traffic and Ethernet utilization with respect to bandwidth and its management. This analytical approach is especially useful when determining the effects of proposed system changes. The software Extend™ chosen for this model simulates well the individual parts of the sending and receiving nodes and the required Ethernet of the overall communication system. Extend™ refers to these individual parts as "blocks".

1. Building "Blocks"

Extend™ uses predefined scripts of computer code known as "blocks" and represents each of them with a highly descriptive icon. Each block has its own characteristics and is easily selected by the user when its library is opened. Blocks of a similar type are aggregated together into one library. Once opened, each library remains available for that particular model. This allows the model itself to be smaller in terms of required memory because the model itself simply references each block's computer code resident in each library during the simulation run.

Additionally double clicking on it will access each block. It will either display its "dialogue box" or if "hierarchical", it will display the blocks that it contains. If a dialog box is displayed, the user is prompted for additional information particular to that block selected. The dialog box also contains a complete explanation of all connections to that

particular block and what the block itself is capable of accomplishing. This information can range from maximum queue length to message data sizes depending on the block chosen.

2. Hierarchy

Although, the model appears at first to be fairly simple, Extend™ allows for blocks to be "buried" beneath other blocks. Extend™ allows the user to select blocks and provides the option for them to be made "hierarchical". This in turn gathers all of the chosen blocks and places one hierarchical block in their place. All of the connections previously used are still intact with system chosen names as illustrated in the model description chapter. Although all of the blocks are accessed and used in sequence, this optional use of hierarchy is especially useful when there are too many connections or too many blocks for the user to view everything clearly. This option can also be chosen many times once sub-blocks are defined. Therefore many layers can be contained within each model. The model developed for this thesis has four layers.

B. BLOCK DESCRIPTION

1. FNMOC Monterey

The hierarchical block containing the FNMOC logo represents this portion of the model. As Figure 2 illustrates, it has four connections available for traffic flow into the Ethernet block for eventual traffic to the NLMOC Norfolk block.

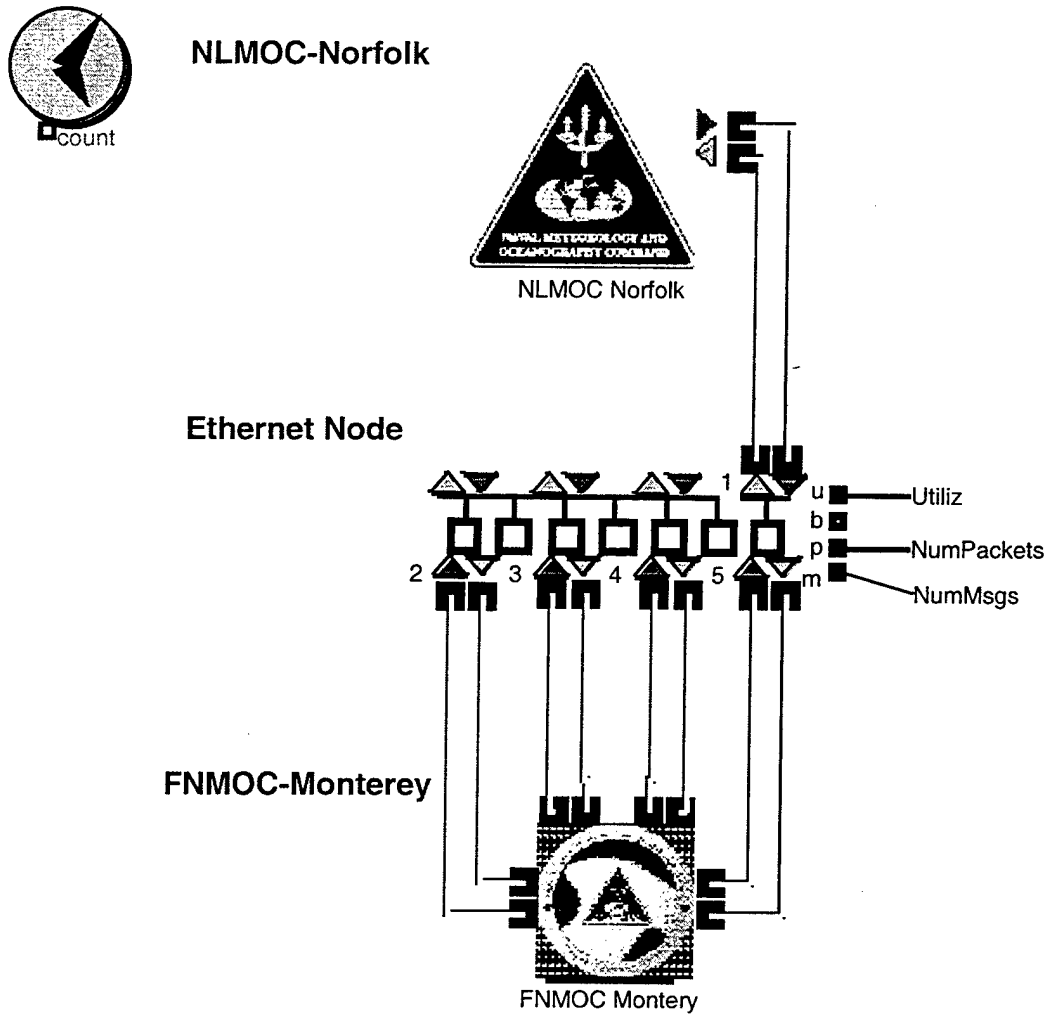

Figure 2. Top Model Layer

Although it is possible for messages to flow from Monterey back into Monterey using this model, there is no traffic directed in this fashion. In the upper left-hand corner of Figure 2, there is also a clock icon indicating to Extend™ that this will be a discrete event model.

a. NOGAPS

By double clicking on the FNMOC Monterey block, the layer beneath the block is revealed. Figure 3 illustrates this next layer.

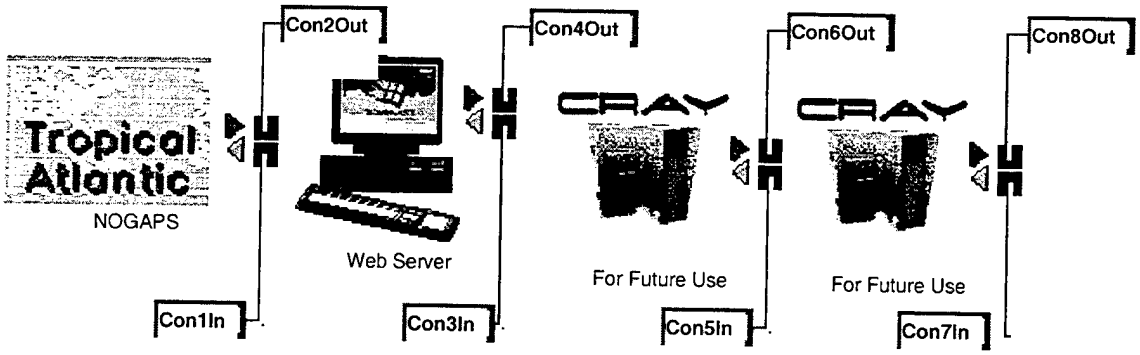

Figure 3. FNMOC Monterey Block (Inputs and Outputs)

The block represented by the Tropical Atlantic Naval Operational Global Atmospheric Prediction System (NOGAPS) logo indicates the portion of the model where the large data transfer is originated. This data is sent every twelve hours to NLMOC Norfolk.

b. Web Server

The web server block immediately adjacent to the NOGAPS block, both receives requests for data and sends updated data from FNMOC Monterey every fifteen minutes via the Ethernet connection. All messages are destined for NLMOC Norfolk via the Ethernet block. The typical message sizes are 250 kilobytes received and 100 kilobytes sent. This message traffic mimics the actual data sizes for messages that request forecast weather updates and the update itself respectively. This data is also allowed to vary in time by using a standard normal distribution with a mean of sending a

message every 15 minutes and a standard deviation of five seconds. This more realistically simulates unforeseen line delays.

c. *For Future Use*

Both blocks in Figure 3 that read "For Future Use" are intended for potential studies to be accomplished beyond the scope of this thesis. However, each will generate and receive message traffic as directed by the user just as the other blocks.

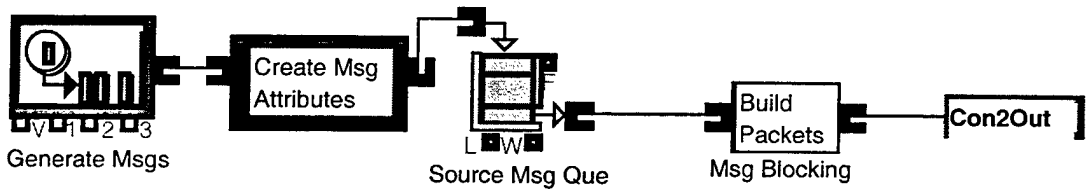

Figure 4. FNMOC Monterey Block (Message Generation)

(1) Message Generation with Attributes. The first block in Figure 4 actually generates messages for the simulation. It is here that the user defines the timing of each message. In this case the large data message is sent once every twelve hours. However, it is also allowed to be sent early or late within a five second standard normal distribution with a mean of twelve hours.

The next block receives the item and appends user-defined attributes onto it. This block is also hierarchical and is illustrated in Figure 5.

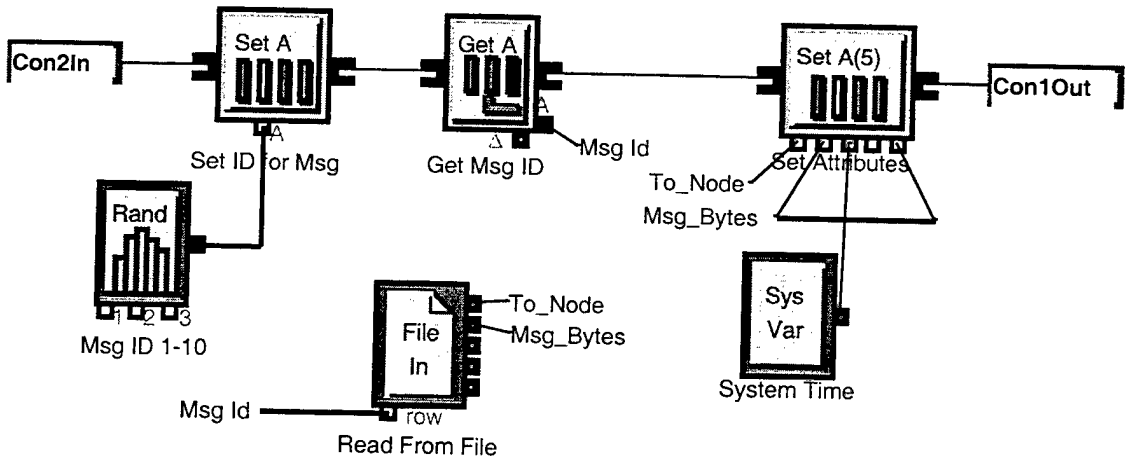

Figure 5. FNMOC Monterey Block (Message Attributes)

It is finally within this layer that the message receives all of its attributes such as destination, message size, and message identification. The first block in Figure 5 is the system assigned connection for the generated message that is input from the previous layer. The next block provides the message with a randomly chosen message identification. Once set, the message identification is requested using the block marked "Get A" for "get attribute". This identification is used to select a row of data in the "file" block. That row of data contains the message's destination and size in bytes. Each message now contains its own discrete data and is stamped with a system time. The system time will support the measurement of time delay for the Ethernet.

Referring once again to Figure 4, the message with all of its attributes is sent into a first-in-first-out (FIFO) queue as required by Extend™ for the purpose of model integrity. This is done to ensure that no messages are lost in transition. The messages are then sent to the packet building block.

(2) Packet Building Block. In this block each message is simply parsed into the correct number of packets for the Ethernet.

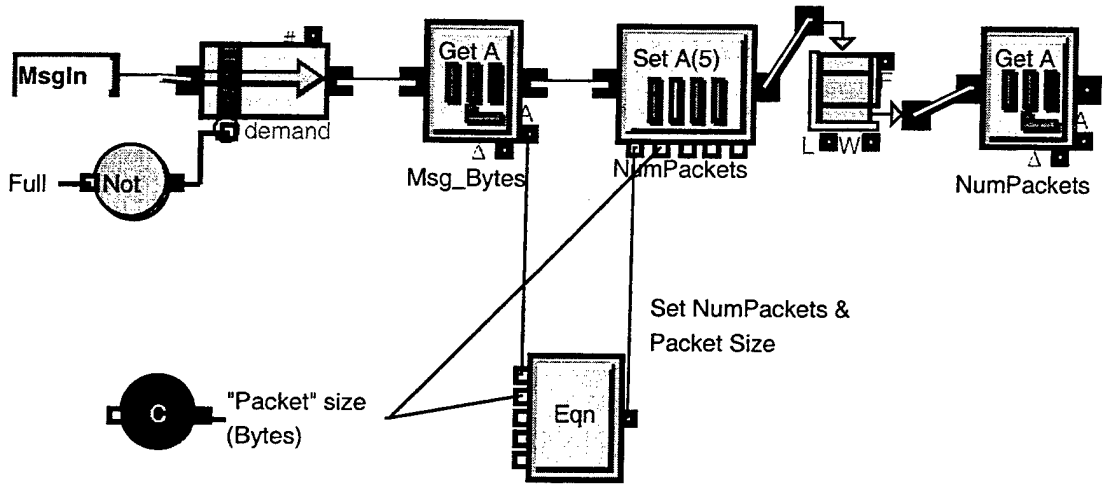

Figure 6. FNMOC Monterey Block (Build Packets: First Half)

As illustrated in Figure 6, the block again first starts with the hierarchical connection set by the system. The message then goes into a service activity block, which serves as a conditional wait. This ensures that it is the only message being serviced at the present time. The logical block beneath it provides the logical input of "full" if the final FIFO queue of this block is not empty.

Next the message is asked for its size. That size is divided by 1500 which is the standard Ethernet packet size. This renders the number of packets required by this message. The message is now sent into another FIFO queue after which the number of packets is requested from it. Figure 7 illustrates what happens next.

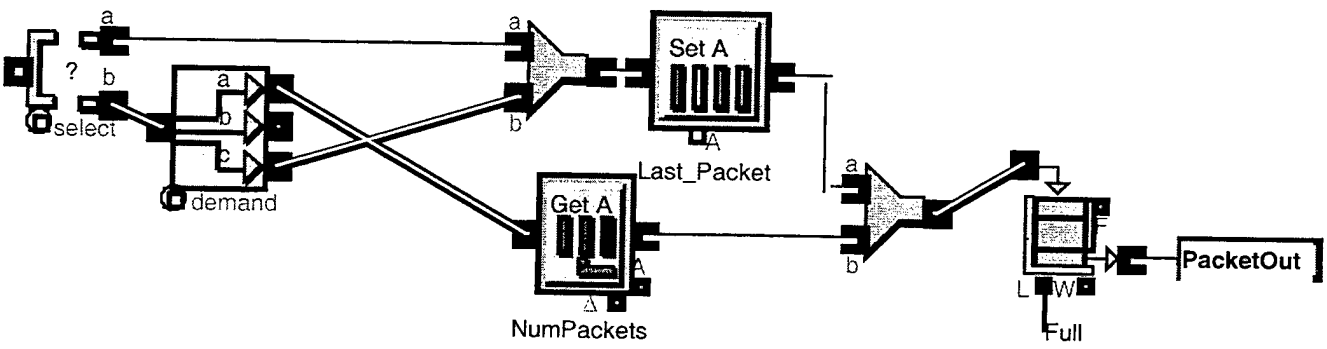

Figure 7. FNMOC Monterey Block (Build Packets: Second Half)

In Figure 7 the message is then selected according to its size. Only a message smaller than 1500 bytes is allowed to travel along the "A" pathway where it will be stamped "Last Packet", all other inbound messages are sent along the "B" pathway. Last packet will later be used as output to count the number of messages processed through the system. Next they arrive at second block above marked with an "a, b or c" output. This "unbatch" block takes the inbound message and duplicates it, sending one copy to be stamped "last packet" and one copy to take on the value of the number of packets it requires. These items are all rejoined and sent to the final FIFO queue where the number of packets are sent followed by the last packet. Once the queue is empty the logical variable "full" is reset to zero allowing the next message to be processed.

From here the packets are all sent via the outbound connection to the Ethernet block for further processing.

2. Ethernet

This portion of the model is represented by a user defined Ethernet block. As Figure 8 shows, eight connections are available, this model uses five of them. Four of the connections are from NLMOC Monterey and one leads to NLMOC Norfolk.

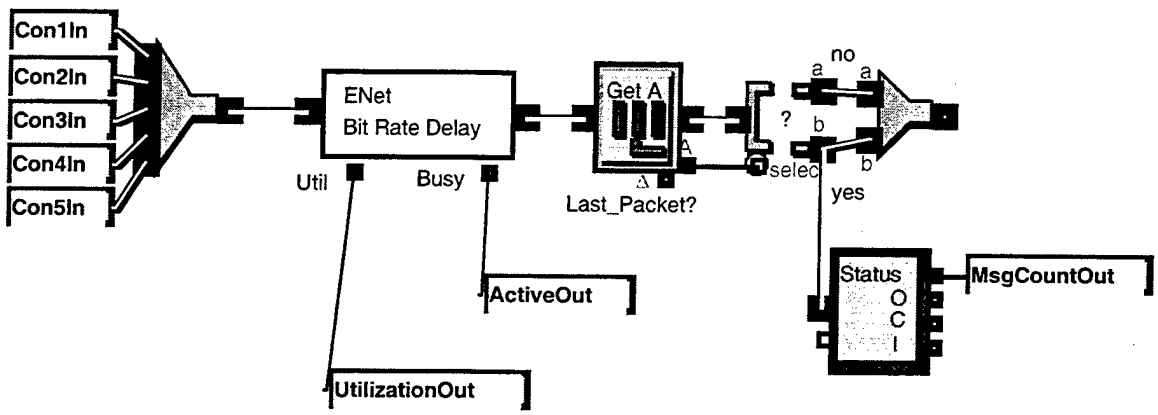

Figure 8. Ethernet Block (First Half)

As Figure 8 illustrates, all of the nodes have an inbound connection. As packets arrive they are immediately sent into a hierarchical block where bandwidth is verified and therefore time delay is determined. Afterwards, each packet is asked if it is the "last packet". If it is the "last packet" then it is sent along the path marked "b" and one message is counted. All packets, including the "last packet" are then gathered and sent to the second half of this block as if Figure 9.

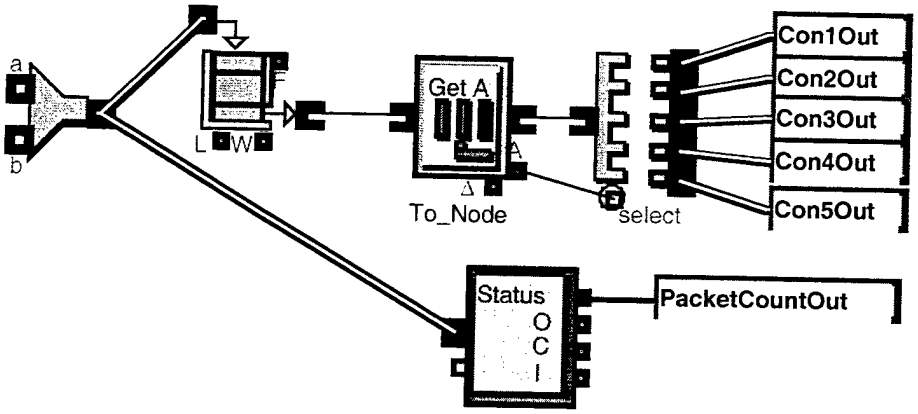

Figure 9. Ethernet Block (Second Half)

As Figure 9 illustrates the inbound packets are all gathered and copies are sent into another FIFO queue where their destination is queried and into an output to count all processed packets. Packets are then sent onward to their proper and final destination.

a. Ethernet Bit Rate Delay

Figure 8 shows this hierarchical block, which is further illustrated in Figure 10 below.

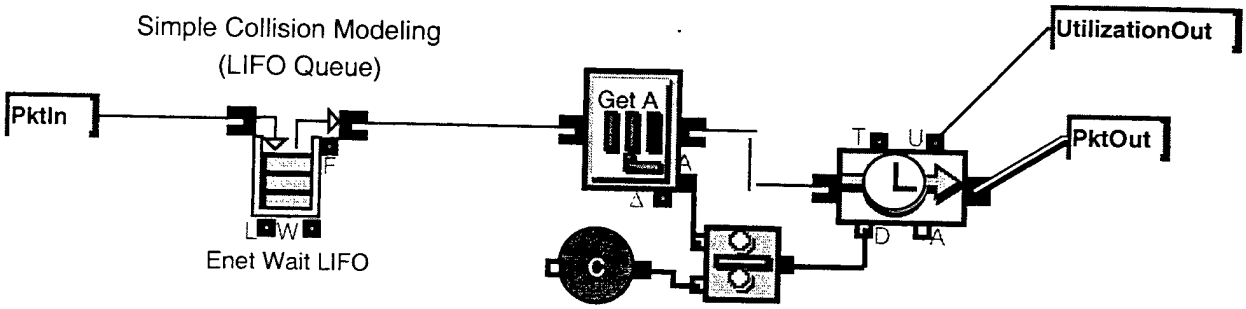

Figure 10. Ethernet Block (Bit Rate Delay)

As Figure 10 begins, packets are brought in via the system connection and put into a "last-in-first-out" (LIFO) queue. This allows for simple packet collision modeling by allowing the last packet to simply go first. Therefore, in the event that two or more packets should be competing for Ethernet processing, the last one entering will be serviced first. This "back-off" of packet processing simulates in a simple manner the transfer protocol used for Ethernet processing.

This model realistically will have no collisions because of the small amount of message traffic and because the line used between FNMOC Monterey and NLMOC Norfolk is a dedicated line without any requests or messages originating from other customers. However, if more customers were added in the future, a more robust collision algorithm would have to be written for this model.

Next each packet is asked for its size which is generally 1500 bytes unless it is the last packet when it may be less. The correct time delay is determined by dividing the size of the packet by the bandwidth available. The percent of utilization of the Ethernet is then output and the packet is sent to complete the Ethernet block.

3. NLMOC Norfolk

This block is represented by the NLMOC Norfolk logo. It has one, two-way connection available from the Ethernet block available for traffic flow. It also contains the same hierarchical blocks for sending and receiving messages. However the data it sends corresponds to 250 kilobyte size request messages. These messages like their corresponding replies from FNMOC Monterey, are allowed to vary according to a

standard normal distribution with a mean of fifteen minutes and a standard deviation of five seconds.

a. Packet Reception

As illustrated in Figure 11, packets arrive at their destination having completed the generation and Ethernet processing.

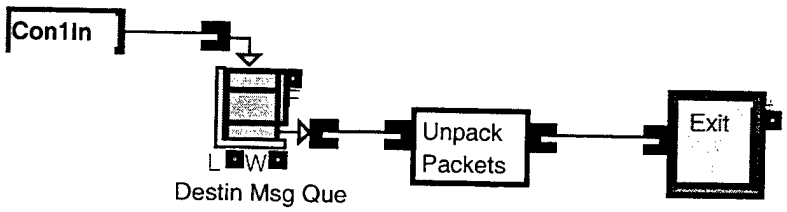

Figure 11. NLMOC Norfolk Block (Packet Reception)

Packets are then sent into a FIFO queue for model integrity and sent immediately to the unpacking block. Figure 12 illustrates how packets are unpacked.

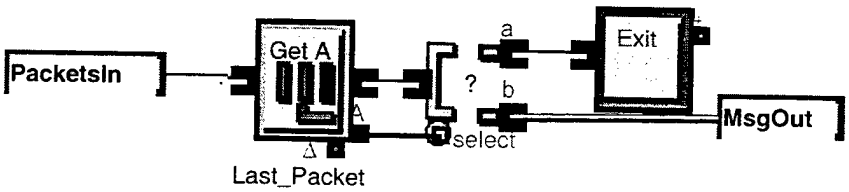

Figure 12. NLMOC Norfolk Block (Packets Unpacked)

Packets are first queried if it is the last packet. If the packet is the last packet then it is selected to follow along the "b" path and a complete message is counted. Otherwise the packet exits along the "a" path and it is counted as a single packet.

4. Output

The output block gathers and displays the chosen data from each model run. As Figure 13 illustrates, this block reads the Ethernet utilization, as well as messages and packets processed by the network.

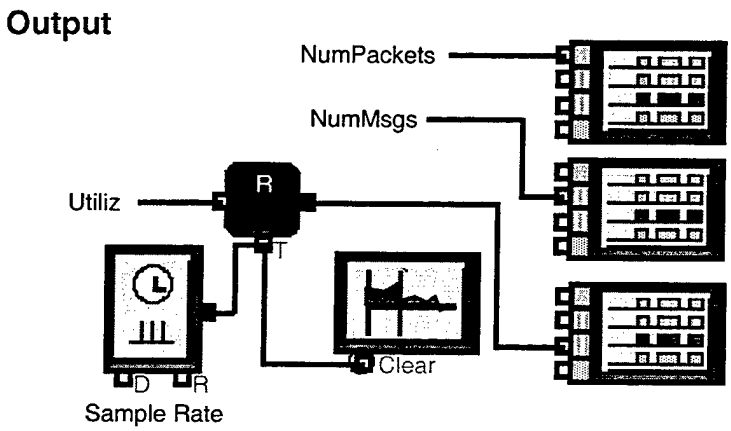

Figure 13. Output Block

The first block labeled with an "R" takes as its input the Ethernet utilization. This is sampled every half second, as directed by the "Sample Rate" block. Additionally all counters and activities are cleared once a new input is received. This ensures that no aggregation of data occurs. Three plotter blocks are then given these outputs to plot.

THIS PAGE INTENTIONALLY LEFT BLANK

IV. MODEL RESULTS

A. OVERVIEW

The model was run on a desktop, Pentium III™, 500-megahertz computer. Each complete run required approximately 20 minutes to complete. Each run is executed for 5200 seconds. This provides enough time for each contributing node to complete its transmission and eventual reception of data. Originally longer run times were explored; however, the model's behavior remained the same whether it was run for 14.4 hours or 26 hours. The only difference was that the graphic output became more difficult to read.

Additionally, the model was run for three different excursions. Each excursion below, detailed on Table 1, is motivated by highly probable upcoming proposals with regard to system improvements.

Excursion	Bandwidth	Message Traffic
1	1.544 Mbps (T-1)	• NLMOC Requests updates every 15 min. (250KB) • FNMOC Sends update every 15 min. (100KB) • FNMOC Sends 1 GB every 12 hours.
2	10 Mbps	• NLMOC Requests updates every 15 min. (250KB) • FNMOC Sends update every 15 min. (100KB) • FNMOC Sends 1 GB every 12 hours.
3	1.544 Mbps (T-1)	• NLMOC Requests updates every 15 min. (250KB) • FNMOC Sends update every 15 min. (100KB) • FNMOC Sends 83.3 MB every hour.

Table 1. Excursion Data

B. EXCURSION ONE (T-1 LINE)

For the first excursion the available bandwidth used is 1.544 megabits per second over the Ethernet. This is the standard T-1 bandwidth. As Figure 14 indicates, the Ethernet runs smoothly, with 100 percent utilization occurring only every 16 minutes

approximately and lasts for less than one second. This occurs until the very large, one gigabyte data transfer commences. When this occurs, all other Ethernet traffic is delayed approximately one hour and twenty-eight minutes as shown in the heavily shaded region in Figure 14 below.

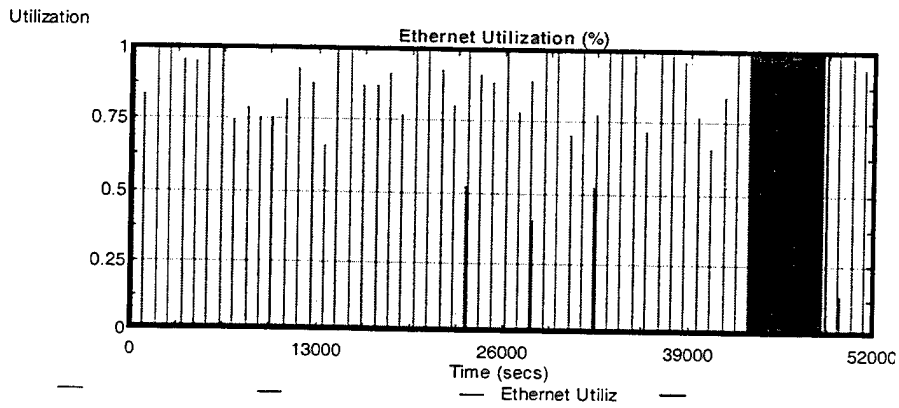

Figure 14. 1 GB Message Sent Every 12 Hours via T-1 Line (1.544 Mbps)

C. EXCURSION TWO (10 MEGABITS PER SECOND)

For the second excursion the available bandwidth used is improved to 10 megabits per second over the Ethernet. This was done because FNMOC Monterey is able to transfer data at 10 megabits per second even though NLMOC Norfolk can only receive data at the standard T-1 bandwidth. However by expanding the service level agreement NLMOC Norfolk's receive rate could be improved. As expected, Figure 15 illustrates that the Ethernet runs even more smoothly than before, with typical maximum Ethernet utilization remaining at 20 percent. This occurs approximately every 16 minutes. Additionally, when the very large, one gigabyte data transfer occurs, the

Ethernet is delayed approximately 3 minutes - a decrease of one hour and twenty-five minutes.

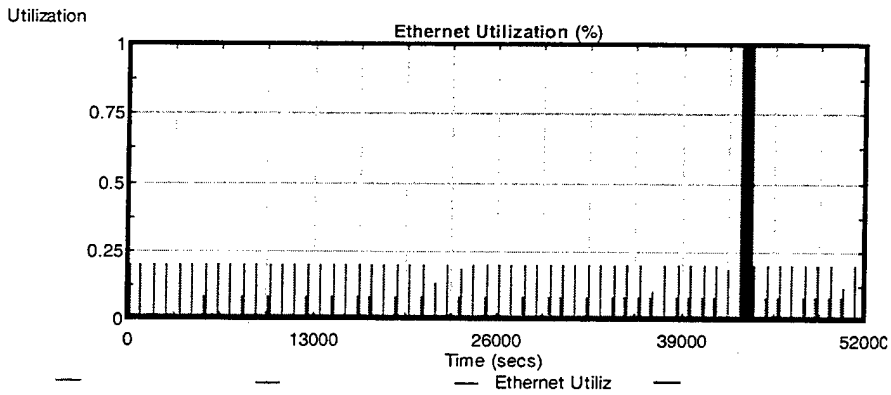

Figure 15. 1 GB Message Sent Every 12 Hours via 10 Mbps Line

D. EXCURSION THREE (T-1 LINE: HOURLY OUTPUT)

The third excursion uses an available bandwidth of 1.544 megabits per second, the same as the first excursion. However in this scenario, the large, one gigabyte file is parsed into twelve equal parts of 83.3 megabytes instead of being sent all at one time. Each part is then transmitted every hour. This could be accomplished through a change in the management of the outbound database. As Figure 16 indicates the Ethernet runs fairly smoothly, with 100 percent utilization occurring every fifteen minutes as well as every hour when the 83.3 megabyte file is sent. However the Ethernet delay is now just 7.2 minutes every hour as a result in the change of data management.

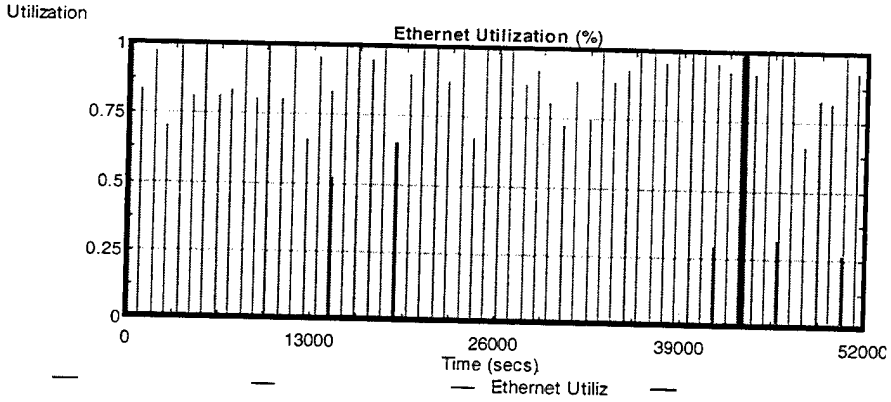

Figure 16. 83.3 MB Message Sent Every Hour via T-1 Line

V. CONCLUSIONS AND RECOMMENDATIONS

A. CONCLUSIONS

Although data is routinely sent via a dedicated leased line from FNMOC Monterey to NLMOC Norfolk, the time delay experienced by sending a one gigabyte message once every twelve hours is one hour and twenty-eight minutes. This delay causes all other traffic to wait until this message completes its transmission. If the line bandwidth were improved, or if the size of the message were decreased by allowing parts of it to be sent incrementally, this line delay would either be decreased or at least occur for much shorter periods of time and less often.

1. NLMOC Norfolk

NLMOC is a major recipient of weather data. The files that it receives are then added to other observations in order to service its customer as well. However, as is typical among users of data of all types, NLMOC Norfolk routinely requests all the data that can be sent. Although they could request fewer files they currently request as much data as is available. This is done to achieve the most up to date forecasts in support of fleet operations and seems reasonable with respect to urgent operations. Unfortunately, in terms of available bandwidth, this is not very economical. Although it is beyond the scope of this thesis, if there were some method of reducing the data requested this would also reduce the time delay.

B. RECOMMENDATIONS

The goal of this thesis is to allow the user the opportunity to simulate proposed system changes to the connection between FNMOC Monterey and NLMOC Norfolk.

Having completed three excursions with this model the first goal of simulating actual line delay was accomplished. Additionally, the second goal was to explore the effects of altering the system through changing the bandwidth. This alternative indicates an immense decrease in message time can truly be achieved, especially if bandwidth could be improved to 10 megabits per second.

Finally, in allowing the current system to be altered to allow data to be sent every hour instead of once every twelve hours also shows a great decrease in system time delay. In choosing between these two, the second should likely be chosen because it also seems to be the least expensive of the excursions explored.

Additionally, as the budget allows, greater bandwidth should be purchased to allow quicker transmission of the requested data. However this line bandwidth should not exceed 10 megabits per second because FNMOC Monterey is unable to send it any faster.

LIST OF REFERENCES

1. Booth, C. W., *Military Applications of Intranet Technology: Fleet Numerical Meteorology and Oceanography Center*, Master's Thesis, Naval Postgraduate School, Monterey, California, September 1997.
2. Diamond, Pat and Rivera, James, *Extend™ User's Manual*, Version 4, Imagine That, Inc., 1997.
3. Diamond, Pat and Rivera, James, *Extend™ + Manufacturing User's Manual*, Version 4, Imagine That, Inc., 1997.
4. Cromer, Douglas E., *Computer Networks and Internets*, 2nd ed., Prentice-Hall Inc., 1999.
5. McCabe, James D., *Practical Computer Network Analysis and Design*, 2nd ed., Morgan-Kaufmann Publishers Inc., 1998.
6. Osmundson, John S., *A Systems Engineering Methodology for Information Systems*, Systems Engineering, Vol. 3, Nr. 2, January 2000.
7. Booz-Allen &Hamilton, *Communications Mid-Range Plan for FNMOC Monterey, California*, December 1998.

THIS PAGE INTENTIONALLY LEFT BLANK

INITIAL DISTRIBUTION LIST

1. Defense Technical Information Center 2
   8725 John J. Kingman Road, Suite 0944
   Ft. Belvoir, VA 22060-6218

2. Dudley Knox Library 2
   Naval Postgraduate School
   411 Dyer Road
   Monterey, CA 93943-5101

3. John S. Osmundson, Code: CC/OS 1
   Naval Postgraduate School
   411 Dyer Road
   Monterey, CA 93943-5101

4. Steven J. Iatrou, Code: IW/IS 1
   Naval Postgraduate School
   411 Dyer Road
   Monterey, CA 93943-5101

5. Sam Lloyd 1
   Fleet Numerical Meteorology & Oceanography Center
   76 Grace Hopper Avenue, Stop 1
   Monterey, CA 93943-5501

6. David Huff 1
   Fleet Numerical Meteorology & Oceanography Center
   76 Grace Hopper Avenue, Stop 1
   Monterey, CA 93943-5501

7. Douglas J. MacKinnon 3
   Naval Recruiting Command
   Bldg. 784, Room 36
   5722 Integrity Drive
   Millington, TN 38054-5057