Microwave Devices & Radar

LECTURE NOTES
VOLUME III

by Professor David Jenn

Contributors: Professors F. Levien, G. Gill, J. Knorr and J. Lebaric

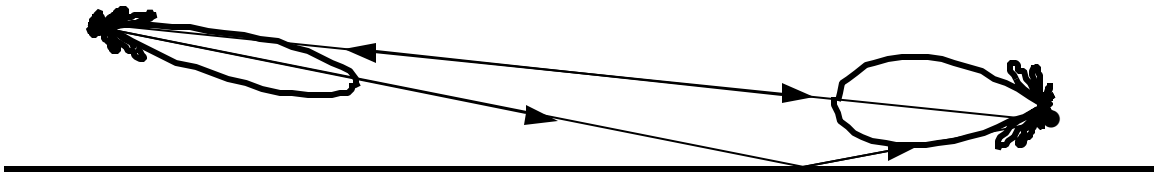

ver4.6

Receiver Types (1)

Basic crystal video receiver:

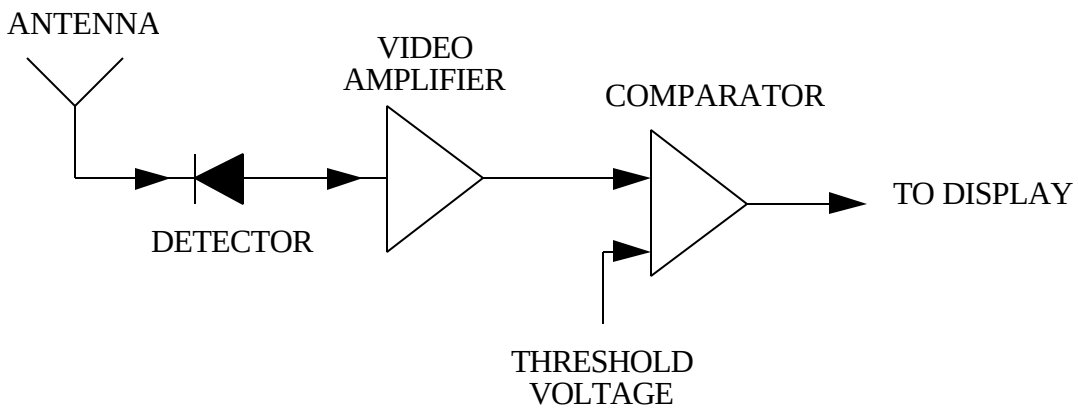

Superheterodyne receiver:

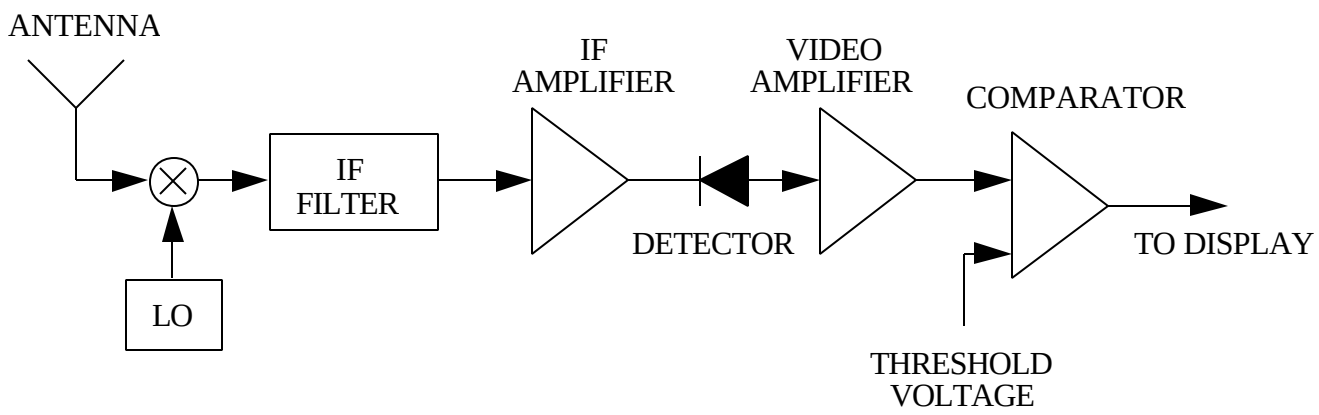

Receiver Types (2)

Homodyne receiver:

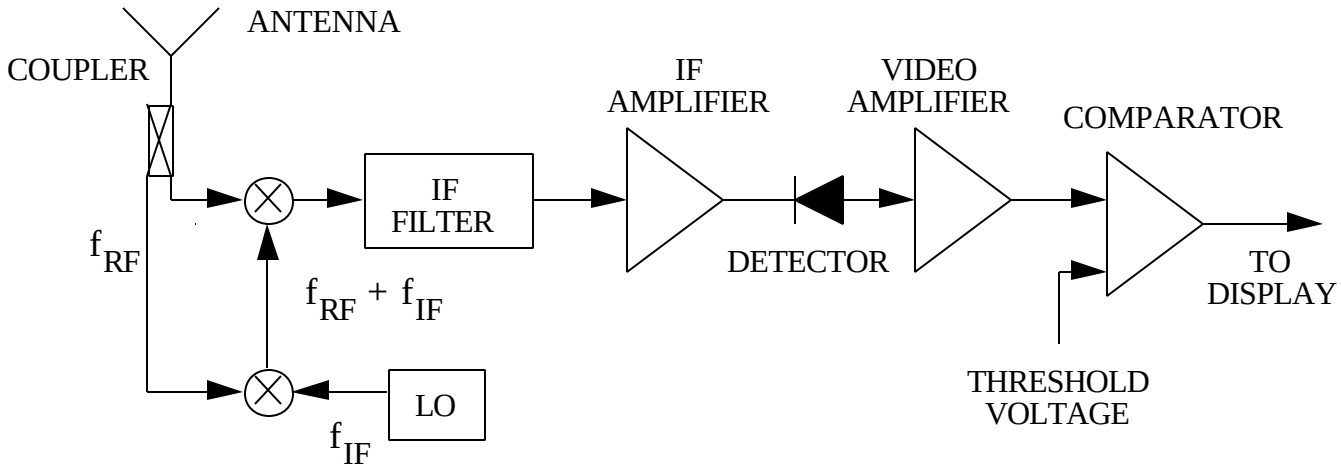

I/Q (zero frequency IF) receiver:

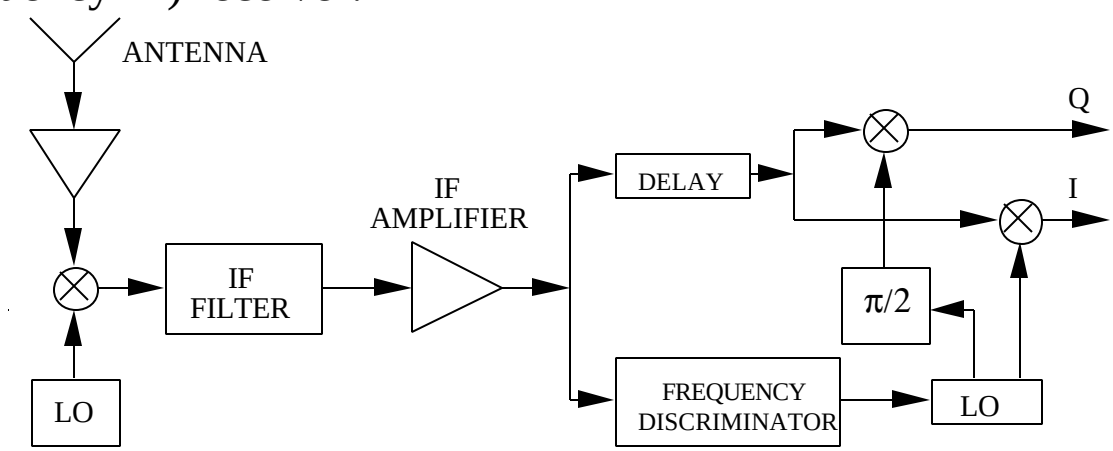

Noise Power Spectral Density

A "noise signal" in the time domain is denoted as $n(t)$ and its <u>power spectral density</u> (or simply <u>power spectrum</u>) is $S_N(f)$ (i.e., therefore $n(t) \leftrightarrow S_N(f)$). <u>White noise</u> is zero mean and has a constant power spectrum

$$S_N(f) \equiv n_o / 2 = kT$$

The factor of 1/2 is typically added because the noise power is defined only for positive frequencies, but the power spectral density frequently occurs in integrals with $-\infty < f < \infty$ or $-B < f < B$. The noise power in a band of frequencies between f_1 and f_2 ($\Delta f = f_2 - f_1$) is the integral of the power spectral density:

$$N_o = \int_{f_1}^{f_2} (n_o / 2) df = \frac{n_o \Delta f}{2}$$

(N_o is usually used to denote the noise power of thermal noise. In general N is used.) The total noise power is infinite since

$$N_o = \int_{-\infty}^{\infty} (n_o / 2)\, df = \infty$$

and thus true white noise does not exist. It is a useful model for situations where the noise bandwidth is so large that it is out of the range of the frequencies of interest.

Matched Filters (1)

Bandwidth tradeoff for filters:

large bandwidth $\rightarrow$ signal fidelity, large noise
small bandwidth $\rightarrow$ signal distorted; low noise

The optimum filter characteristic depends on the waveform. It is referred to as the <u>matched filter</u>. It maximizes the peak signal to mean noise power ratio.

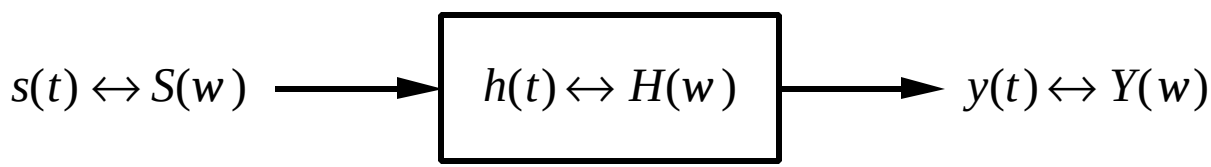

$$y(t) = s(t) * h(t) = \int_0^t s(t)\ \underbrace{h(t-t)}_{\substack{\text{IMPULSE} \\ \text{RESPONSE}}} dt$$

or

$$Y(w) = H(w)S(w)$$

What $H(w)$ (also expressed as $H(f)$) will maximize the output SNR?

Matched Filters (2)

Assume a <u>time limited signal</u> that has a maximum at time $t = t_1$. The maximum at the output is

$$y(t_1) = \frac{1}{2p} \int_{-\infty}^{\infty} S(w) H(w) e^{jw\, t_1} dw$$
$$= \int_0^{t_1} s(t) h(t_1 - t) dt = \int_0^{t_1} s(t_1 - t) h(t) dt$$

For a $1\,\Omega$ load the instantaneous output power is $S = y^2(t)$. Consider a differential band of frequencies between f and $f + df$. The noise signal spectra at the input and output are $S_N(f)$ and $Y_N(f)$, respectively. Therefore

$$Y_N(f) = S_N(f) H(f)$$

Mean-squared noise power at the output:

$$N = \overline{s_N^2} = \left\langle \int_{-\infty}^{\infty} |Y_N(f)|^2 \, df \right\rangle = \left\langle \int_{-\infty}^{\infty} |S_N(f) H(f)|^2 \, df \right\rangle$$

Matched Filters (3)

The noise power spectral density for white (gaussian) noise is

$$n_o(f) = 2\langle | S_N(f) | \rangle = k\,\mathrm{T_o} \equiv n_o$$

The noise power at the output is

$$\overline{s_N^2} = \frac{1}{2}\int_{-\infty}^{\infty} | H(f) |^2 \, n_o(f)\,df = \int_0^{\infty} | H(f) |^2 \, n_o \, df$$

From Parseval's theorem:

$$\overline{s_N^2} = \frac{n_o}{2}\int_{-\infty}^{\infty} h^2(t)\,dt$$

so that

$$\mathrm{SNR} = \frac{y^2(t_1)}{\overline{s_N^2}} = \frac{\left| \int_0^{t_1} s(t_1 - t)\,h(t)\,dt \right|^2}{\frac{n_o}{2}\int_{-\infty}^{\infty} h^2(t)\,dt} = \frac{\left| \int_{-\infty}^{\infty} S(w)\,e^{jw\,t_1} H(w)\,dw \right|^2}{p\,n_o \int_{-\infty}^{\infty} \left| H(w) \right|^2 dw}$$

Schwartz inequality

$$\left| \int s(x)\,h(x)\,dx \right|^2 \le \left| \int s(x)\,dx \right|^2 \left| \int h(x)\,dx \right|^2$$

Matched Filters (4)

Note that $s(t)$ and $h(t)$ are real

$$\text{SNR} \le \frac{\int_0^{t_1} s^2(t_1 - t)dt \int_{-\infty}^{\infty} h^2(t)dt}{\frac{n_o}{2}\int_{-\infty}^{\infty} h^2(t)dt} = \frac{\int_{-\infty}^{\infty} \left|S(w)e^{jw\,t_1}\right|^2 dw \int_{-\infty}^{\infty} \left|H(w)\right|^2 dw}{p\,n_o \int_{-\infty}^{\infty} \left|H(w)\right|^2 dw}$$

The maximum will occur when the equality holds

$$h(t) = \begin{cases} a\,s(t_1 - t), & t < t_1 \\ 0, & t > t_1 \end{cases} \qquad \text{or} \qquad H(w) = a\left[S(w)e^{jw\,t_1}\right]^* = a\,S^*(w)e^{-jw\,t_1}$$

where a is a constant. This is the matched filter impulse response. The maximum SNR is

$$\text{SNR} \le \frac{\int_0^{t_1} s^2(t)dt}{n_o/2} = \frac{2E}{n_o}$$

The signal energy is $E \equiv \int_0^{t_1} s^2(t)dt$ (Note: in general $E \equiv \int_{-\infty}^{\infty} s^2(t)dt$.)

Matched Filters (5)

In the frequency domain:

$$H(w) = a\left[S(w)e^{jwt_1}\right]^* = a\,S^*(w)e^{-jwt_1}$$

(This is equation 5.15 in Skolnik when a is replaced with G_a.) Some important points:

1. The matched filter characteristics depend on the waveform.
2. It doesn't matter what the waveform is, if a matched filter is used in the receiver the SNR=$2E/n_o$
3. t_1 may be very large, which implies long delays and consequently a physically large filter.
4. The output of the matched filter is the <u>autocorrelation function</u> of the input signal

$$y(t) \equiv R(t - t_1) = \int_{-\infty}^{\infty} s(t)s(t_1 - t + t)\,dt$$

Example: Find the matched filter characteristic for a pulse of width t and amplitude 1

$$p_t(t) \leftrightarrow S(w) = t\,\mathrm{sinc}(wt/2)$$

Matched Filters (6)

The matched filter characteristic for this waveform is

$$H(w) = a\,S^*(w)e^{-jwt_1} = a\,t\,\mathrm{sinc}(wt\,/2)\,e^{-jwt}$$

The choice of $t_1 = t$ is somewhat arbitrary. The output signal spectrum is

$$Y(w) = S(w)H(w) = a\,t^2\,\mathrm{sinc}^2(wt\,/2)e^{-jwt}$$

The output waveform is the inverse Fourier transform: a time delayed triangle. The matched filter is realized using a <u>tapped delay line</u>

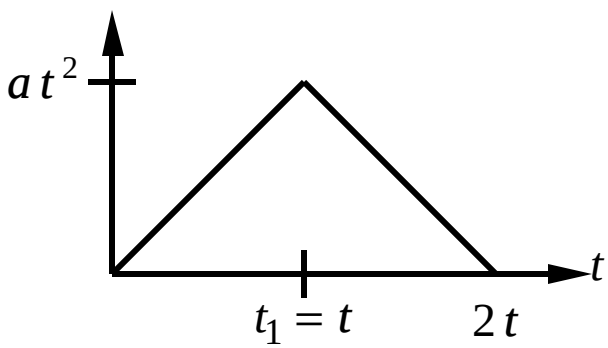

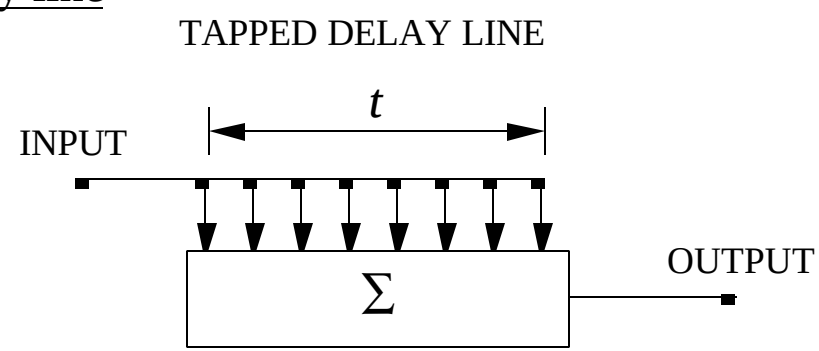

The output signal builds as the input signal arrives at more taps. After time t (end of the pulse) some taps are no longer excited and the output signal level decays. After $2\,t$ none of the taps are excited.

Matched Filters (7)

The signal energy is

$$E = \int_0^t p_t^2(t)\,dt = t$$

and the impulse response of the filter is

$$h(t) = a\ p_t(t)$$

The signal to noise ratio is

$$\text{SNR} = \frac{\left| \int_0^t p_t(t_1 - t)h(t)\,dt \right|^2}{\frac{n_o}{2}\int_0^t h^2(t)\,dt} = \frac{a^2 t^2}{\frac{n_o}{2} a^2 t} = \frac{2E}{n_o}$$

as expected for a matched filter.

Complex Signals

A narrowband signal can be cast in the following form:

$$s(t) = g(t)\cos\left(w_c t + \Phi(t)\right)$$

or, in terms of in-phase (I) and quadrature (Q) components

$$s(t) = g_I(t)\cos(w_c t) - g_Q(t)\sin(w_c t)$$

where

$$g_I(t) = g(t)\cos(\Phi(t))$$
$$g_Q(t) = g(t)\sin(\Phi(t))$$

Define the complex envelope of the signal as

$$u(t) = g_I(t) + j\, g_Q(t)$$

Thus the narrowband signal can be expressed as a complex signal (also called an analytic signal)

$$s(t) = \mathrm{Re}\left\{u(t)e^{jw_c t}\right\}$$

It is sufficient to deal with the complex envelope of a signal (to within a phase shift and constant factor).

Ambiguity Function (1)

Matched filter output signal, $y(t)$, in terms of the complex envelope, $u(t)$

$$y(t) = \frac{a}{2} e^{-jw_c t_1} \int_{-\infty}^{\infty} u(t) u(t - t + t_1) dt$$

If there is a doppler frequency shift

$$s(t) = \mathrm{Re}\left\{ \underbrace{u(t) e^{jw_d t}}_{\text{NEW ENVELOPE}} \; e^{jw_c t} \right\}$$

Neglect constant amplitude and phase factors

$$y(t) = \int_{-\infty}^{\infty} u(t) e^{jw_d t} u^*(t - t) dt = \int_{-\infty}^{\infty} \underbrace{u(t) e^{jw_d t}}_{\substack{\text{SIGNAL} \\ \text{TERM}}} \underbrace{u^*(t - t)}_{\substack{\text{FILTER} \\ \text{TERM}}} dt$$

This is the <u>ambiguity function</u>

$$c(t, w_d) = \int_{-\infty}^{\infty} u(t) e^{jw_d t} u^*(t - t) \, dt$$

Ambiguity Function (2)

Since t is a time delay, let it be the round trip transit time for range R, T_R. Also, express the doppler frequency in Hertz:

$$\left|c(T_R, f_d)\right|^2 = \left|\int_{-\infty}^{\infty} u(t) e^{j2p\, f_d t}\, u^*(t - T_R)\, dt\right|^2$$

A plot of $|c|^2$ is called an <u>ambiguity diagram</u>. Typical plot:

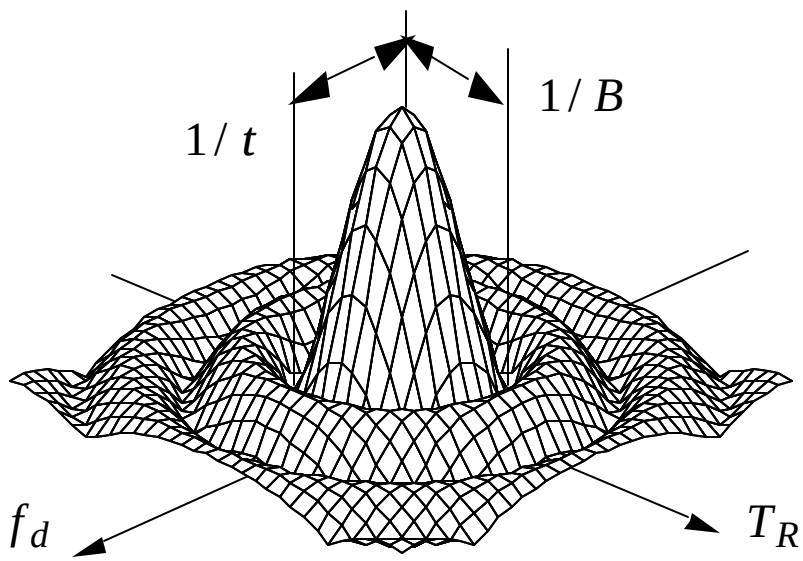

Ambiguity Function (3)

Properties of the ambiguity function:

1. Peak value is at $T_R = f_d = 0$ and is equal to $2E$.
2. The function has even symmetry in both T_R and f_d.
3. Peaks in the diagram other than at $T_R = f_d = 0$ represent ambiguities. Therefore only a single narrow peak is desired (central "spike").
4. Region under the curve is equivalent to energy, and is constant

$$\iint |c|^2 dT_R df_d = (2E)^2$$

Information available from the ambiguity function:

1. <u>accuracy</u>: indicated by the width of the central spike
2. <u>resolution</u>: width of the central spike and its closeness to other spikes
3. <u>ambiguities</u>: spikes along T_R are range ambiguities; spikes along f_d are velocity ambiguities
4. <u>clutter suppression</u>: good clutter rejection where the function has low values

Ambiguity Function (4)

Example (after Levanon): single pulse, $t = 2$

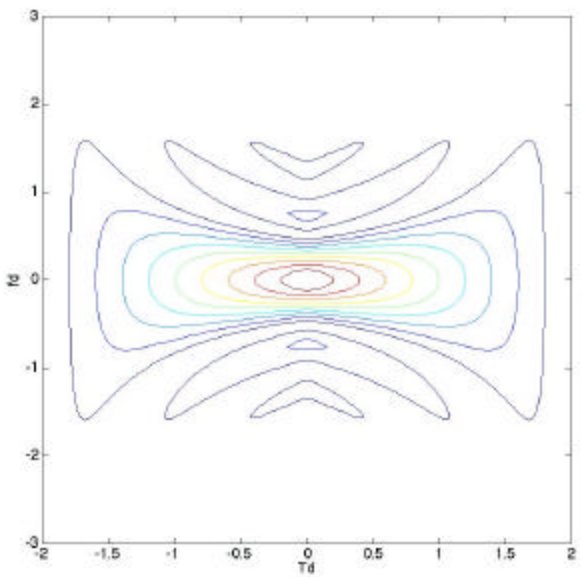

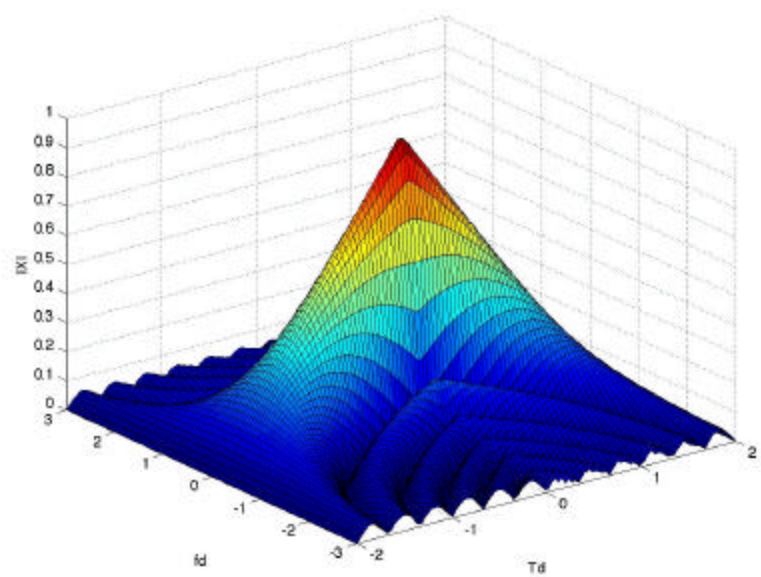

Ambiguity Function (5)

Example (after Levanon): pulse train, $t = 0.2$ and $T_p = 1$

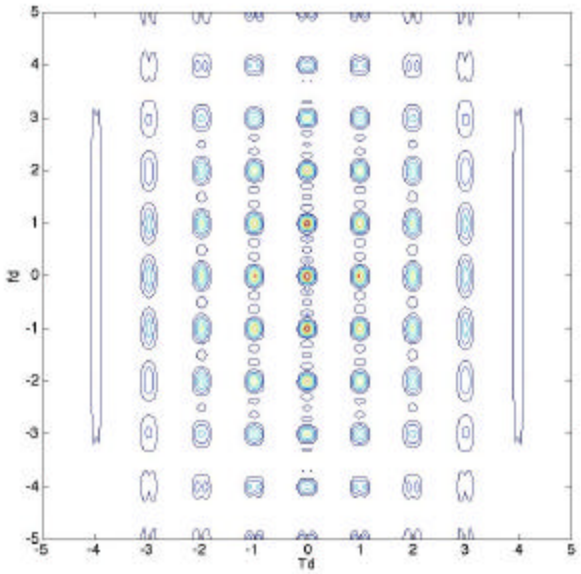

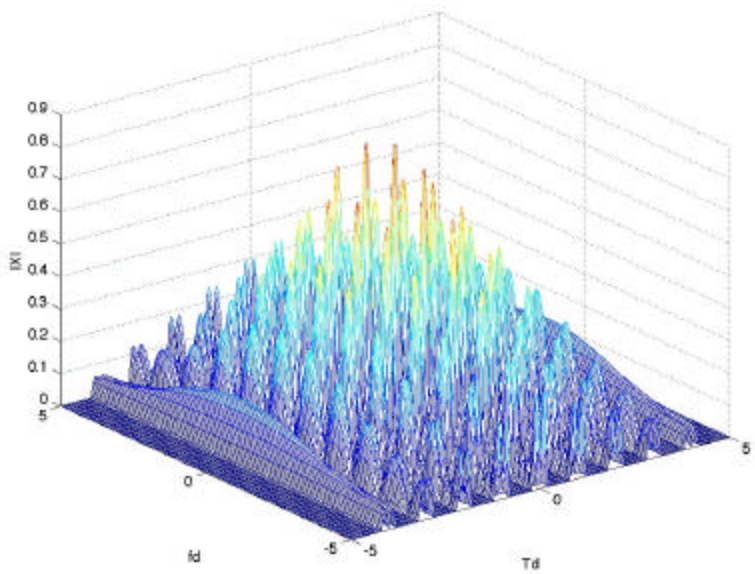

Range Accuracy (1)

The range accuracy depends on the pulse leading edge threshold; that is the time at which we consider the pulse to have arrived.

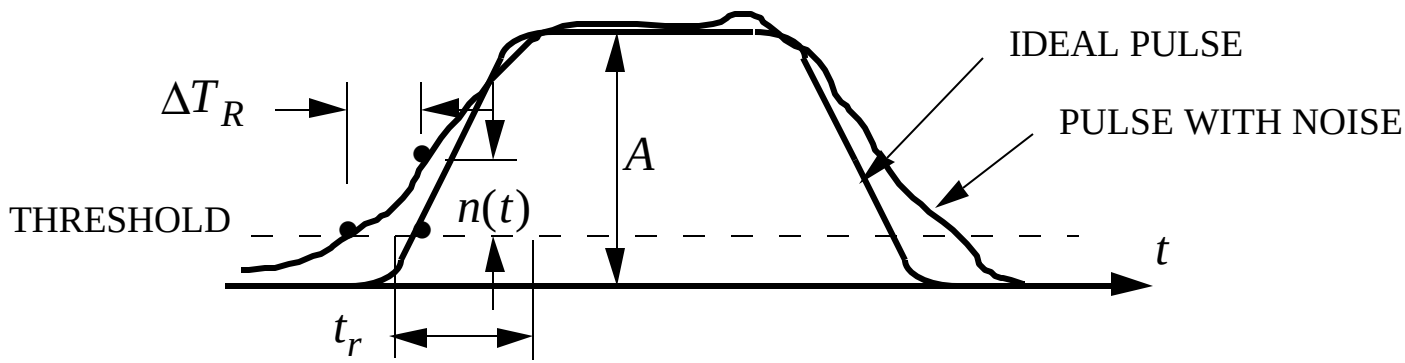

The measured pulse (i.e., pulse with noise) crosses the threshold too soon by an amount ΔT_R. This is equivalent to a range error. The slope of the measured pulse in the vicinity of the threshold is

$$\text{slope} \approx \frac{n(t)}{\Delta T_R}$$

The slope of the uncorrupted pulse is

$$\text{slope} \approx \frac{A}{t_r}$$

Range Accuracy (2)

Assume that the slopes are approximately equal

$$\frac{A}{t_r} \approx \frac{n(t)}{\Delta T_R} \Rightarrow \Delta T_R \approx \frac{n(t)\, t_r}{A}$$

Take expectation of each side

$$\left\langle (\Delta T_R)^2 \right\rangle \approx \left(\frac{t_r}{A} \right)^2 \left\langle n^2(t) \right\rangle$$

$$\overline{(\Delta T_R)^2} \approx \left(\frac{t_r}{A} \right)^2 \overline{n^2(t)}$$

t_r is limited by the IF amplifier bandwidth $t_r \approx 1/B$, or

$$\overline{n(t)^2} = n_o B$$

Therefore the rms range delay error is

$$\sqrt{\overline{(\Delta T_R)^2}} \equiv dT_R = \sqrt{\frac{n_o B}{A^2 B^2}} = \sqrt{\frac{n_o}{A^2 B}}$$

Range Accuracy (3)

Use pulse energy rather than amplitude: $E = \dfrac{A^2 t}{2}$

$$dT_R = \sqrt{\frac{t}{(2E/n_o)B}}$$

Average the leading and trailing edge measurements

$$dT_R \approx \sqrt{\left(\overline{\Delta T_R^2}\right)_1 + \left(\overline{\Delta T_R^2}\right)_2} = \sqrt{2}\sqrt{\overline{\Delta T_R^2}}$$

Final result, based on a rectangular pulse,

$$dT_R = \sqrt{\frac{t}{(2E/n_o)2B}}$$

Skolnik has results for several different pulse shapes in terms of the effective bandwidth of the pulse.

Range Accuracy (4)

General equation for an arbitrary pulse shape:

$$dT_R = \frac{1}{B_e \sqrt{2E/n_o}}$$

where the effective bandwidth of the pulse is defined by (Skolnik uses b).

$$B_e^2 = \frac{\int_{-\infty}^{\infty} (2p\, f)^2 |S(f)|^2 \, df}{\int_{-\infty}^{\infty} |S(f)|^2 \, df} = \frac{1}{E} \int_{-\infty}^{\infty} (2p\, f)^2 |S(f)|^2 \, df$$

For a rectangular pulse $S(f) \propto \text{sinc}(p\, f\, t)$ and with some math (see Skolnik for details)

$$B_e^2 \approx 2B/t$$

Therefore, $dT_R = \sqrt{\frac{t}{4BE/n_o}}$ which corresponds to a range error of $dR = \frac{c\, dT_R}{2}$

Velocity Accuracy

Method of "inverse probability" gives an expression for the rms frequency error:

$$df = \frac{1}{t_e \sqrt{2E/n_o}}$$

t_e is the effective time duration of the pulse defined as

$$t_e^2 = \frac{\int_{-\infty}^{\infty} (2p\,t)^2 s^2(t)\,dt}{\int_{-\infty}^{\infty} s^2(t)\,dt}$$

(Skolnik uses a .) For a rectangular pulse $t_e^2 = (p\,t)^2/3$ which gives

$$df = \frac{\sqrt{3}}{p\,t\sqrt{2E/n_o}}$$

Uncertainty Relation

There is a tradeoff between range and velocity accuracies: a narrow spectrum and short time waveform cannot be achieved simultaneously. This is expressed in the uncertainty relation:

$$B_e t_e \geq p$$

The <u>effective time-bandwidth</u> product must be greater than p. The "poorest" waveform in this sense is the gaussian pulse for which $B_e t_e = p$. To improve both dT_R and df requires

1. increase E/n_o
2. select a waveform with

large $a \rightarrow$ long time duration
large $b \rightarrow$ wide bandwidth

Angular Accuracy

Recall that there is a Fourier transform relationship between an antenna's aperture distribution and the far-field pattern. Therefore the pulse/bandwidth formulas for velocity accuracy can be extended to antenna pointing

$$dq = \frac{l}{w_e \sqrt{2E/n_o}}$$

w_e is the effective aperture width of the antenna

$$w_e^2 = \frac{\int_{-\infty}^{\infty} (2p\,x')^2 |A(x')|^2 \, dx'}{\int_{-\infty}^{\infty} |A(x')|^2 \, dx'}$$

(Skolnik uses g .) For a uniform amplitude distribution over an aperture of width D, $w_e^2 = (p\,D)^2 / 3$ which gives

$$dq = \frac{\sqrt{3}}{p\,(D/l)\sqrt{2E/n_o}} = \frac{0.628 q_B}{\sqrt{2E/n_o}}$$

where $q_B = 0.88 l / D$ has been used.

Pulse Compression

Short pulses are good for small range resolution, but there are problems in practice:

1. difficult to get high energy on the target unless the short pulses are very high peak power
2. short pulses require very wide bandwidth hardware

Pulse compression refers to several methods that allow "long time" waveforms to be used, yet get some of the advantages of a "short time" waveform. Three methods are:

1. Chirp:
   - most common
   - simple analog implementation
   - doppler tolerant
   - capable of high pulse compression ratio (PCR)
2. Binary phase codes:
   - second most common
   - easy digital implementation (apply separately to I and Q channels)
   - doppler sensitive
   - best for low PCRs
3. Low sidelobe codes:
   - more difficult to implement; increased complexity
   - doppler sensitive

Linear FM Pulse Compression (Chirp)

The carrier frequency of each pulse is increased at a constant rate throughout its duration.

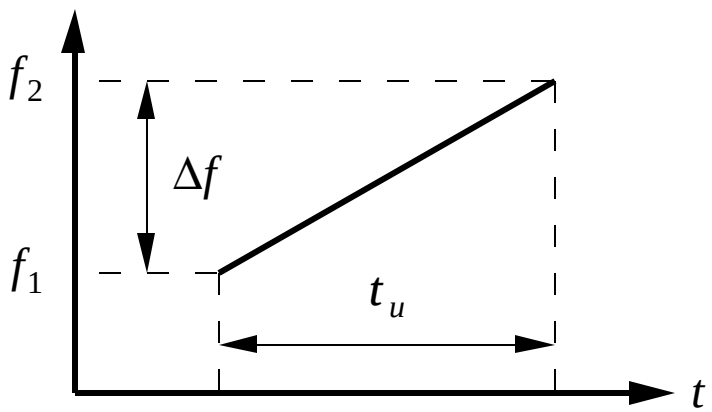

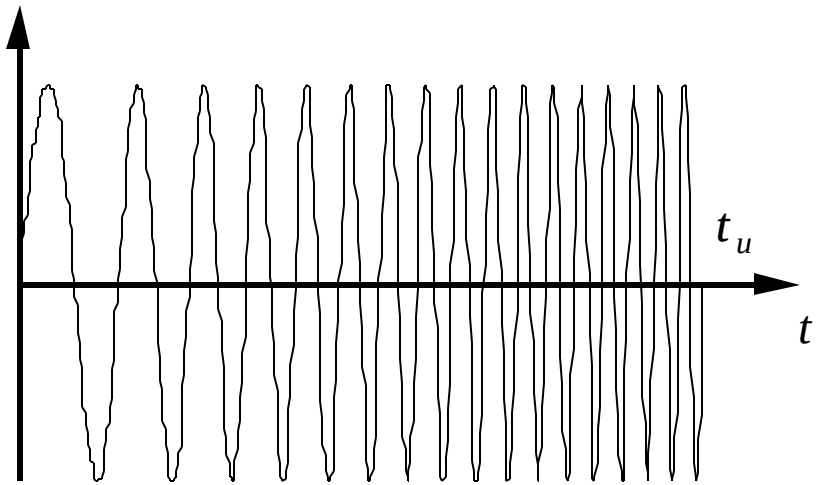

Δf is the <u>frequency deviation</u> and t_u is the <u>uncompressed pulse width</u>. Low frequencies are transmitted first so they arrive at the receiver first. A filter is used in the receiver that introduces a frequency dependent time lag that decreases at the exact rate at which the frequency of the received echo increases. The front of the pulse is slowed relative to the trailing edge. As a result of the time delay, the pulse "bunches up" and emerges from the filter with a much <u>larger amplitude</u> and <u>shorter width</u>.

Linear FM Pulse Compression (Chirp)

Illustration of the dispersive (frequency dependent) filter:

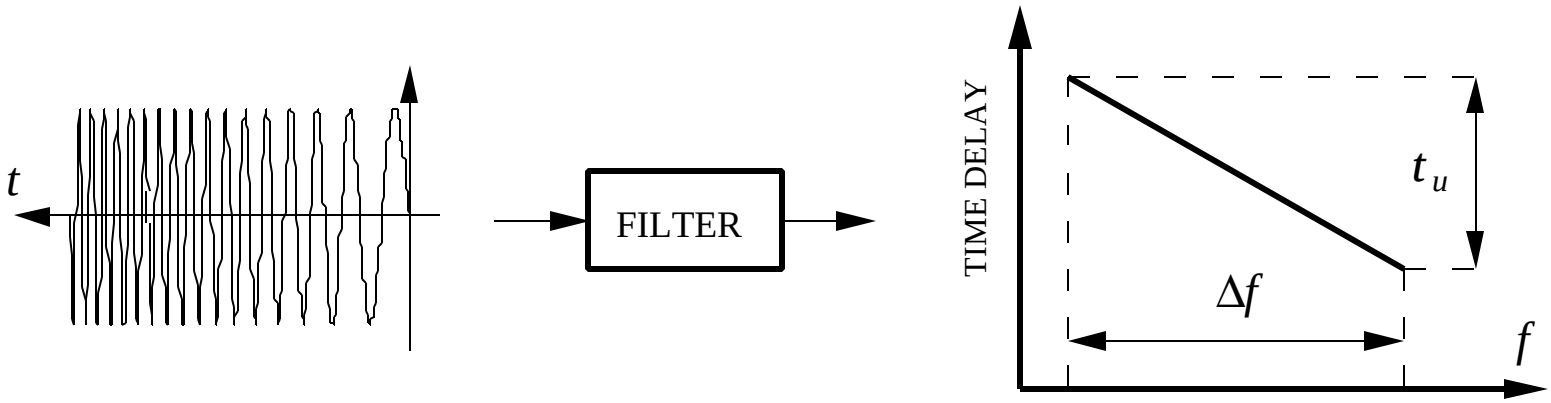

To see how the original waveform appears to be compressed, we look at its spectrum at the output of the filter. Let:

$s(t) =$ signal into filter (received chirp waveform)

$h(t) =$ matched filter impulse response

$g(t) =$ output signal (compressed pulse)

Linear FM Pulse Compression (Chirp)

Using complex signal notation, the output is:

$$g(t) = \int_{-\infty}^{\infty} s(a)\, h^*(t-a)\, da$$

The input (chirp) signal is:

$$s(t) = p_{t_u}(t) \exp\left[j(w_c t + m t^2 / 2) \right]$$

where

$$p_{t_u}(t) = \text{ pulse of width } t_u$$

$$m = \text{FM slope constant} = 2p \underbrace{B}_{\Delta f} / t_u$$

The impulse response of the matched filter is:

$$h(t) = p_{t_u}(-t) \exp\left[j(-w_c t + m t^2 / 2) \right]$$

The received chirp signal after mixing (i.e., at IF)

$$s_{IF}(t) = p_{t_u}(t) \exp\left[j\{(w_{IF} - w_d)t + m t^2 / 2\} \right]$$

Linear FM Pulse Compression (Chirp)

Now perform the convolution

$$g(t) = \int_{-t_u}^{t_u} \exp\left[j((w_{IF} - w_d)a + ma^2/2)\right] \exp\left[j(w_{IF}(t-a) + m(t-a)^2/2)\right] da$$

for $t > 0$. Evaluate the integral to get

$$g(t) = (t_u - t)e^{j(w_{IF} - w_d + mt/2)t} \operatorname{sinc}\left(p(t_u - t)(f_d + Bt/t_u)\right)$$

where $2pB = m\,t_u$ has been used. The <u>pulse compression ratio</u> (PCR) is

$$\text{PCR} = t_u \Delta f \equiv t_u / t$$

Typical values: 100 to 300 (upper limit is about 10^5). The peak value of $g(t)$ occurs at time $t = -t_u f_d / B$. This represents an ambiguity because f_d is not generally known.

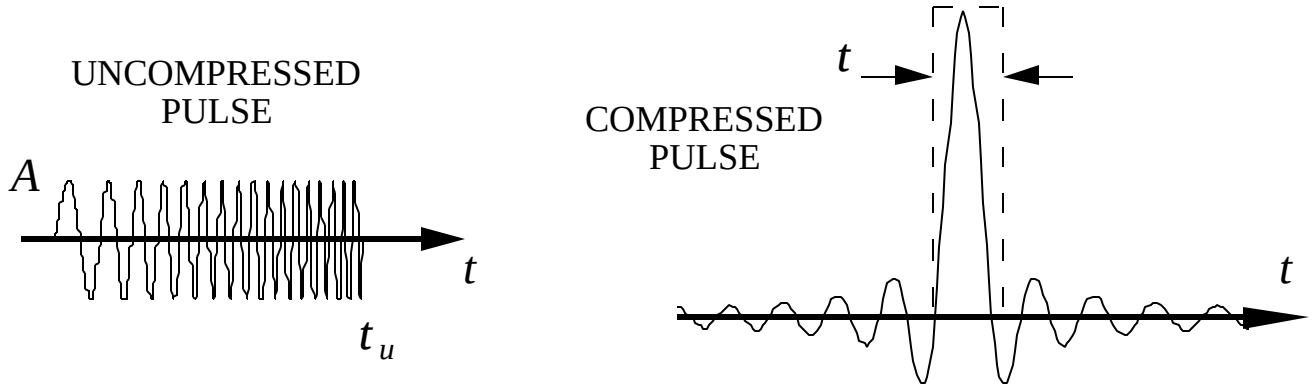

Chirp Filter Output Waveform

The doppler shift from a moving target causes a time shift in the maximum output of the matched filter. This results in a range error. Example: $\Delta f = 1$ MHz, PCR=200, $f_c = 10$ GHz

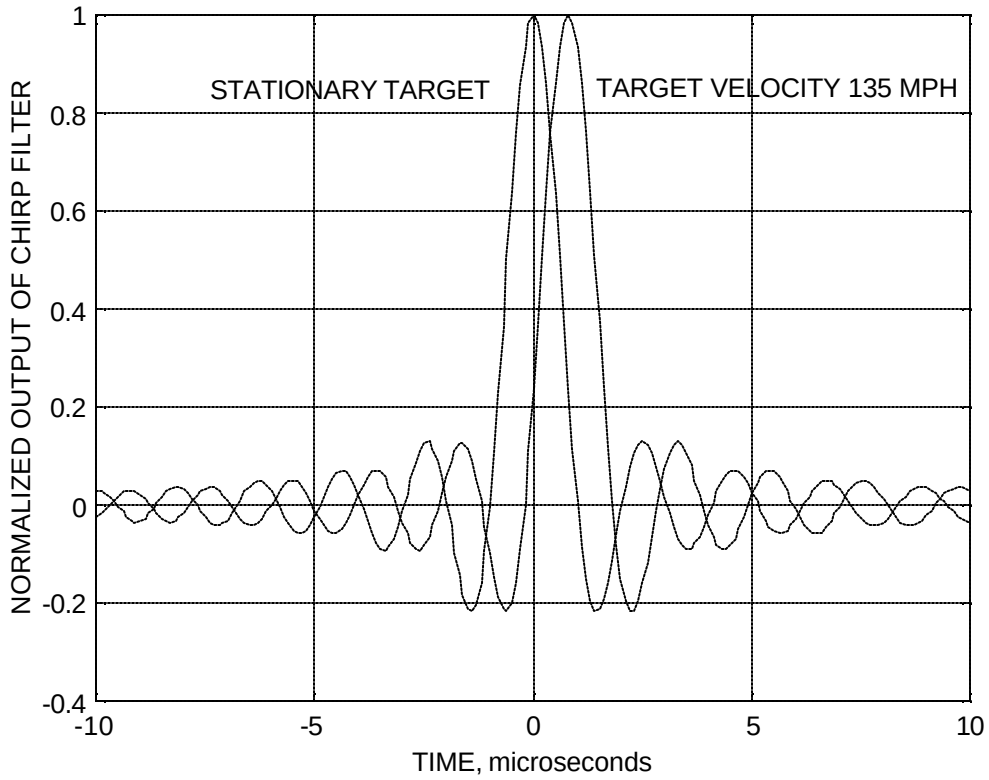

Range Resolution (1)

Resolution refers to the ability of the radar to distinguish two closely spaced targets. The echo returns must be sufficiently separated. Small $\Delta R \Rightarrow$ small pulsewidth t .

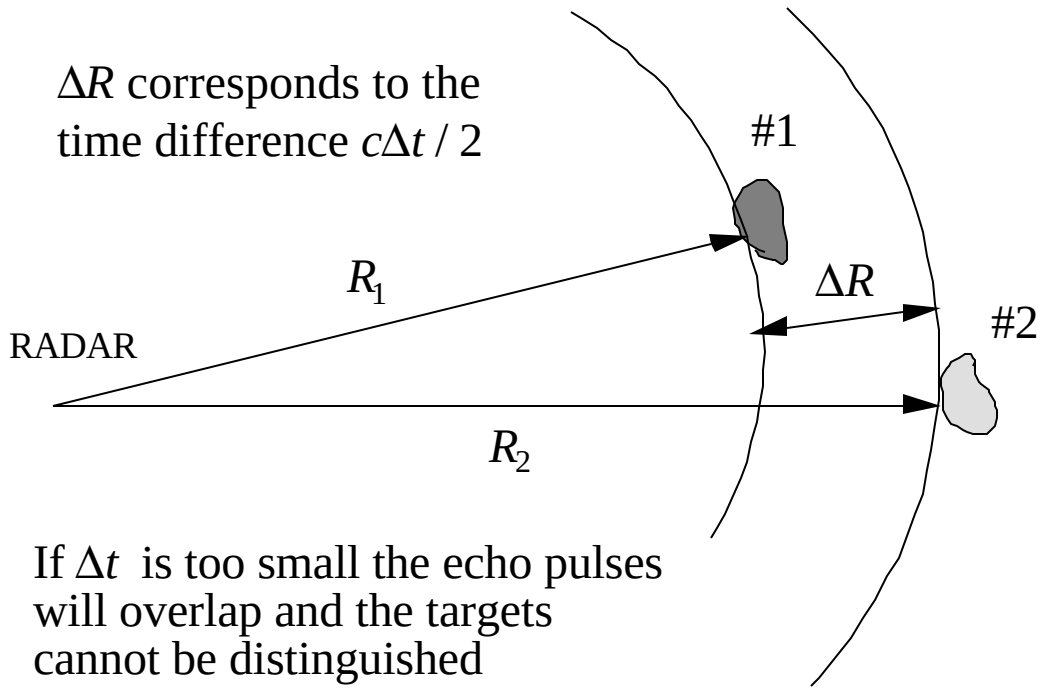

Range Resolution (2)

To distinguish the two pulses $dt \geq 0$ which implies

$$t \leq 2\Delta R / c$$

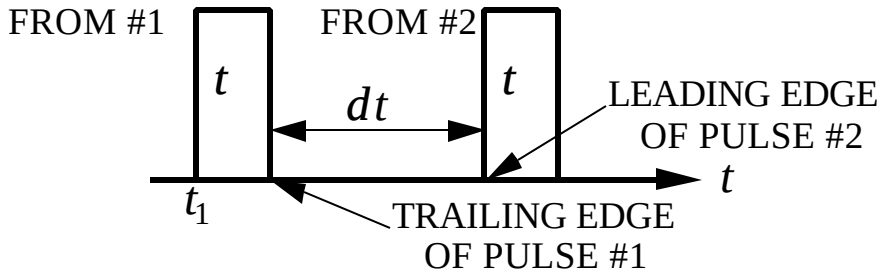

Pulse compression can improve a radar's resolution

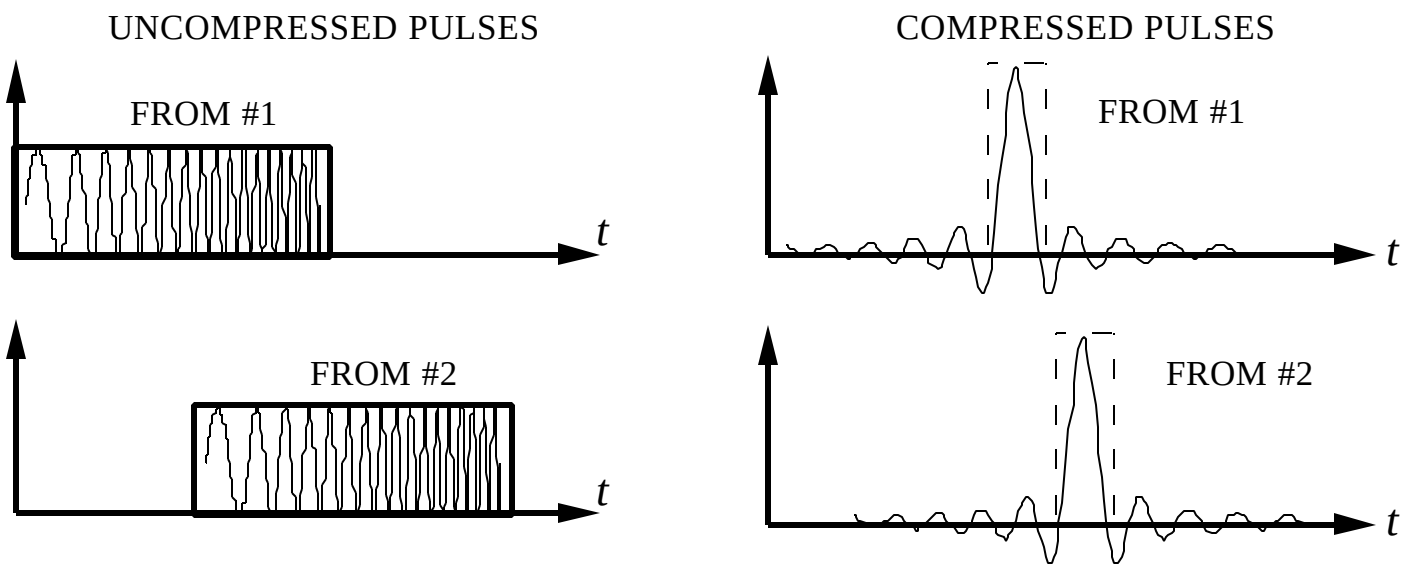

Pulse Compression Example

FM chirp waveform transmits for $t_u = 10\,ms$. What frequency deviation is required to increase the peak SNR by 10 dB at the output of an ideal pulse compression filter?

Definition of PCR: $\text{PCR} = t_u \Delta f = 10 \times 10^{-6} \Delta f$

The PCR is also the increase in peak SNR. Therefore

$$(10 \times 10^{-6}) \Delta f = 10 \text{ dB} = 10 \Rightarrow \Delta f = 1 \times 10^{6} = 1 \text{ MHz}$$

Range resolution of the uncompressed pulse is

$$\Delta R = \frac{c t_u}{2} = \frac{3 \times 10^{8} (10^{-5})}{2} = 1500 \text{ m}$$

The compressed pulse width is $t = \dfrac{t_u}{\text{PCR}}$ and the resolution is

$$\Delta R = \frac{c t}{2} = \frac{3 \times 10^{8} (10^{-6})}{2} = 150 \text{ m}$$

Chirp Complications

1. Chirp introduces a slight doppler frequency ambiguity. The radar cannot distinguish between an intended frequency shift and an induced doppler shift.

2. The chirp filter output for each pulse is a sinc function. For a train of pulses the sinc functions overlap and sidelobes from a strong target can mask a weak target.

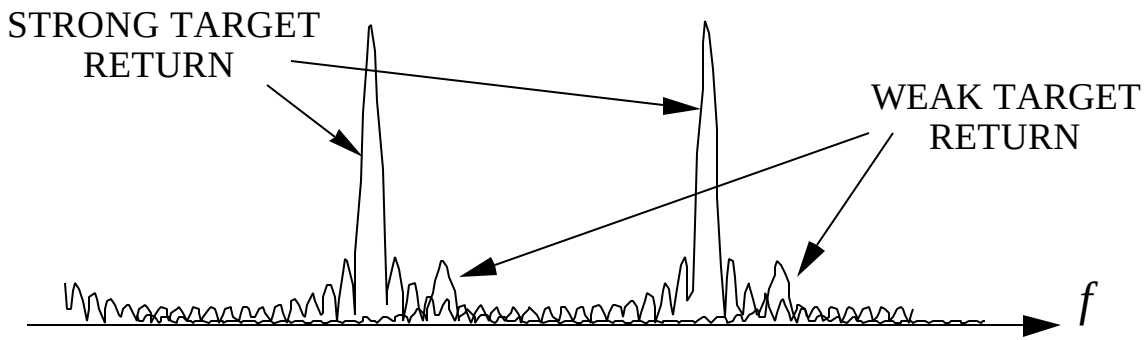

The solution is to use phase weighting (i.e., nonlinear FM).

Digital Pulse Compression

Digital pulse compression utilizes phase-coded waveforms. Usually these are bi-phase modulated waveforms; they yield the widest bandwidth for a given sequence length.

Example of a bi-phase modulated waveform of length five. t_u is the illumination length of the pulse (uncompressed pulse length); t_s is the subpulse length.

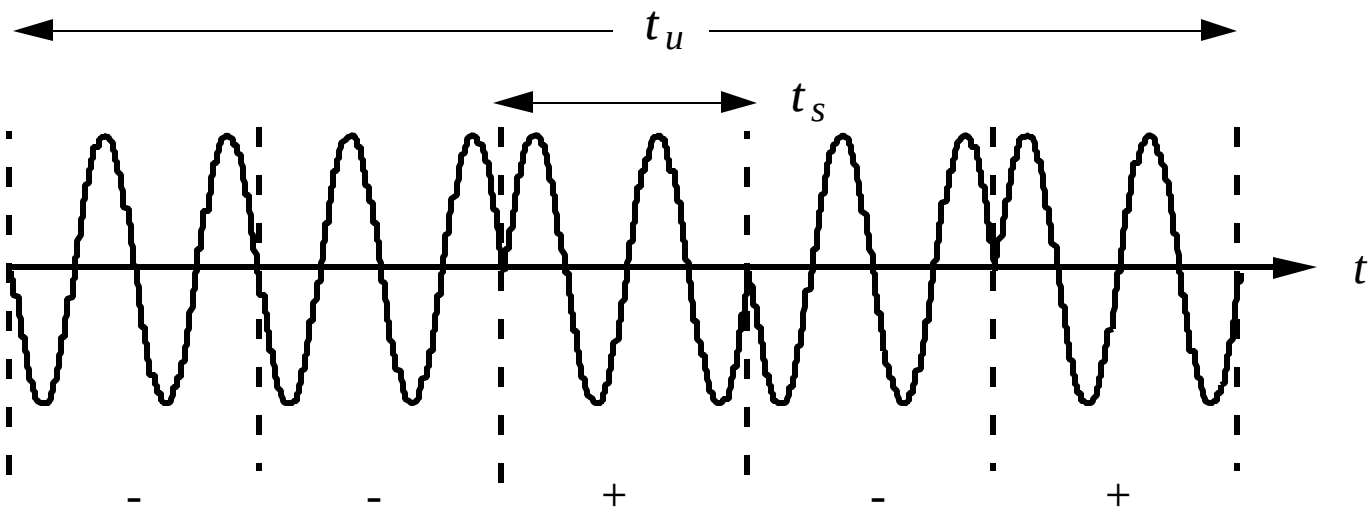

Types of codes:

1. Barker sequences
2. Pseudorandom sequences
3. Frank codes

Barker Sequences

Characteristics:

- N is the number of bits in the sequence
- Its matched filter output (the autocorrelation function of the sequence) contains only three absolute values: 0, 1, and N
- There are only seven known sequences of lengths 2, 3, 4, 5, 7, 11, and 13
- The longest sequence is only 13 bits (security problems)
- All sidelobes are the same level. Levels range from 6 dB to 22.3 dB

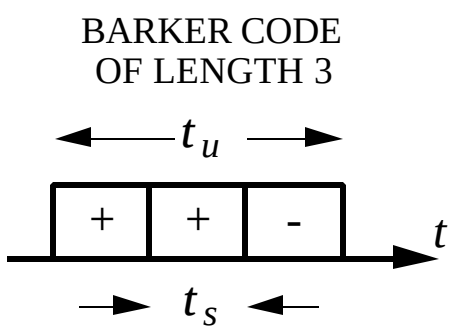

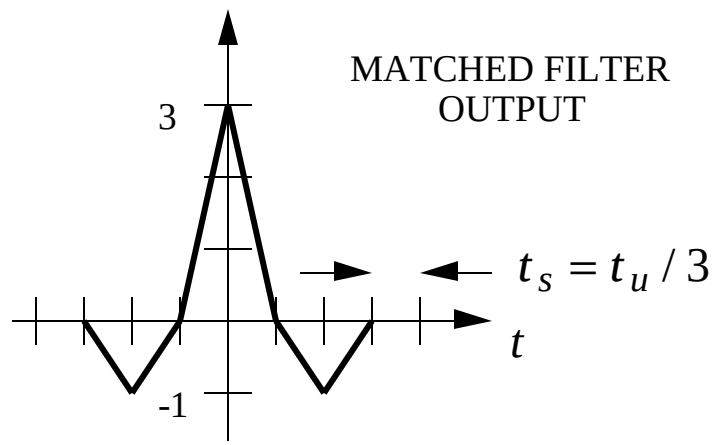

Pulse Compressor/Expander

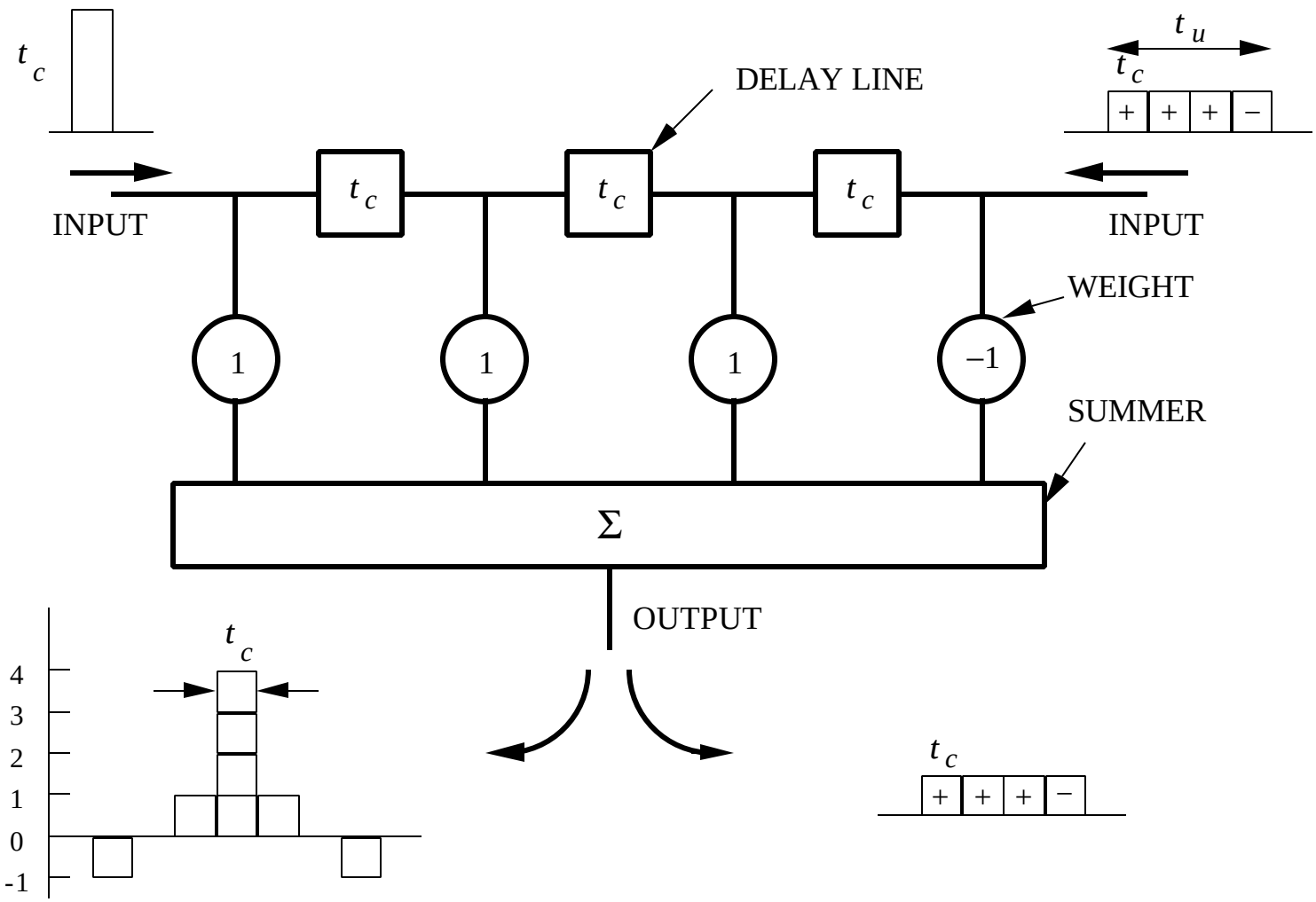

The Ideal Radar Antenna

- Search: Low sidelobes
  High gain on transmit
  Fast sector coverage
  Wide bandwidth
  High power on transmit
  High signal-to-noise ratio on receive

- Tracking: Low sidelobes
  Narrow beam
  Accurate beam pointing
  Wide bandwidth
  High signal-to-noise ratio on receive

- In general: Physical limitations (size, weight, volume, etc.)
  Low cost
  Maintainability
  Robust with regard to failures; built in test (BIT)
  Ability to upgrade
  Resistant to countermeasures

Antenna Refresher (1)

Classification of antennas by size (relative to wavelength).

Let ℓ be the antenna dimension:

1. <u>electrically small</u>, $\ell << l$: primarily used at low frequencies where the wavelength is long
2. <u>resonant antennas</u>, $\ell \approx l / 2$: most efficient; examples are slots, dipoles, patches
3. <u>electrically large</u>, $\ell >> l$: can be composed of many individual resonant antennas; good for radar applications (high gain, narrow beam, low sidelobes)

Classification of antennas by type:

1. reflectors
2. lenses
3. arrays

Other designations: wire antennas, aperture antennas, broadband antennas

Lens Antenna

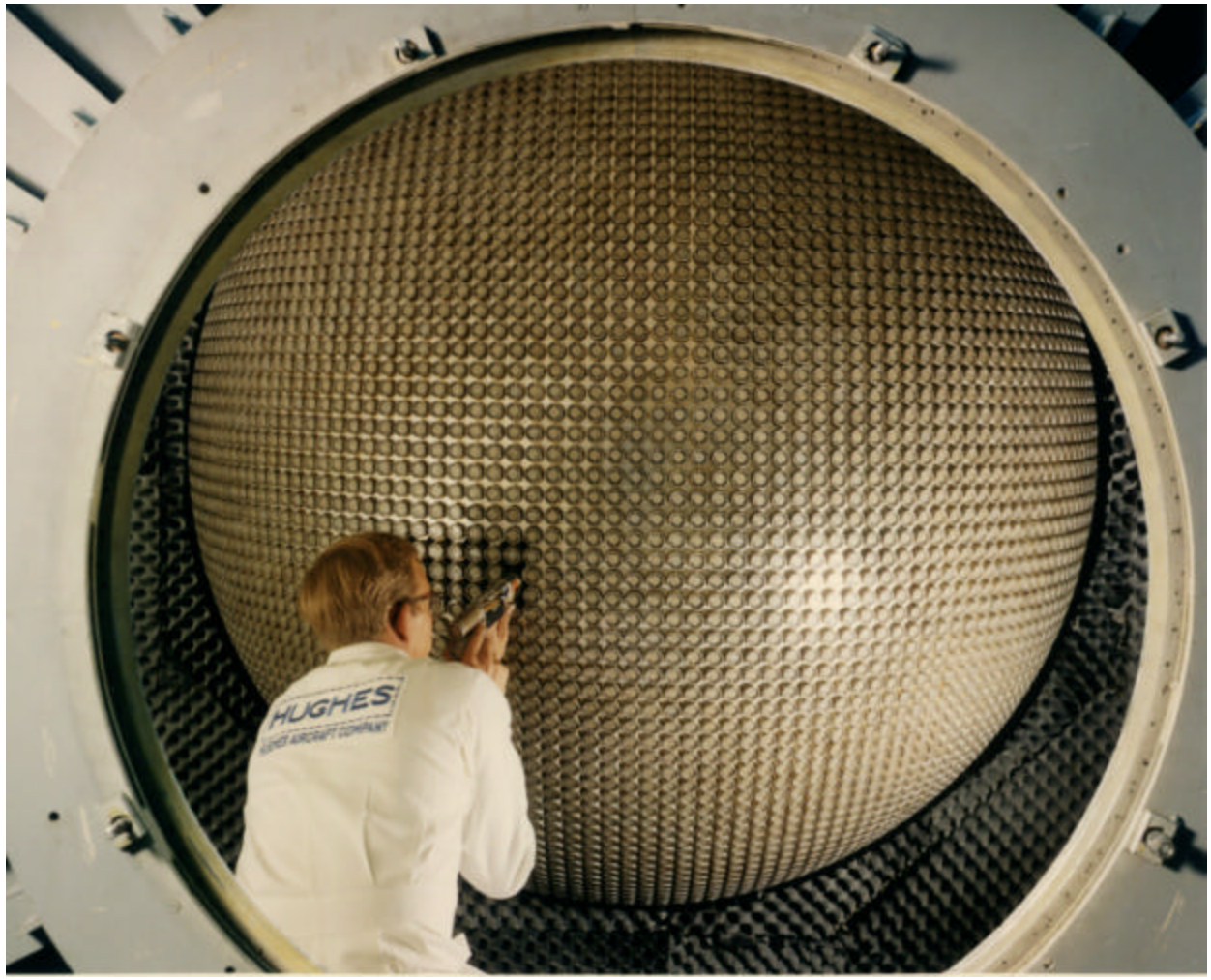

Solid Angles and Steradians

Plane angles: $s = Rq$, if $s = R$ then $q = 1$ radian

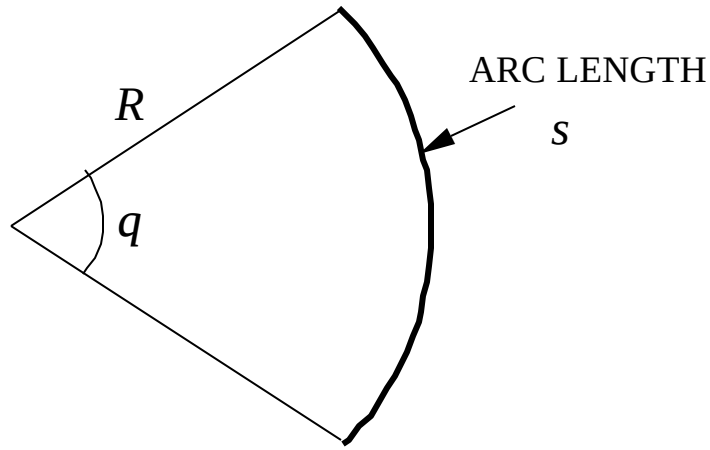

Solid angles: $\Omega = A / R^2$, if $A = R^2$, then $\Omega = 1$ steradian

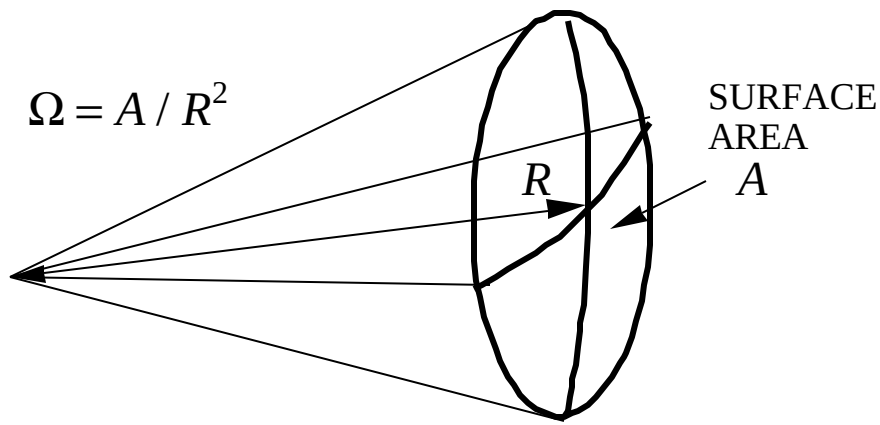

Antenna Far Field

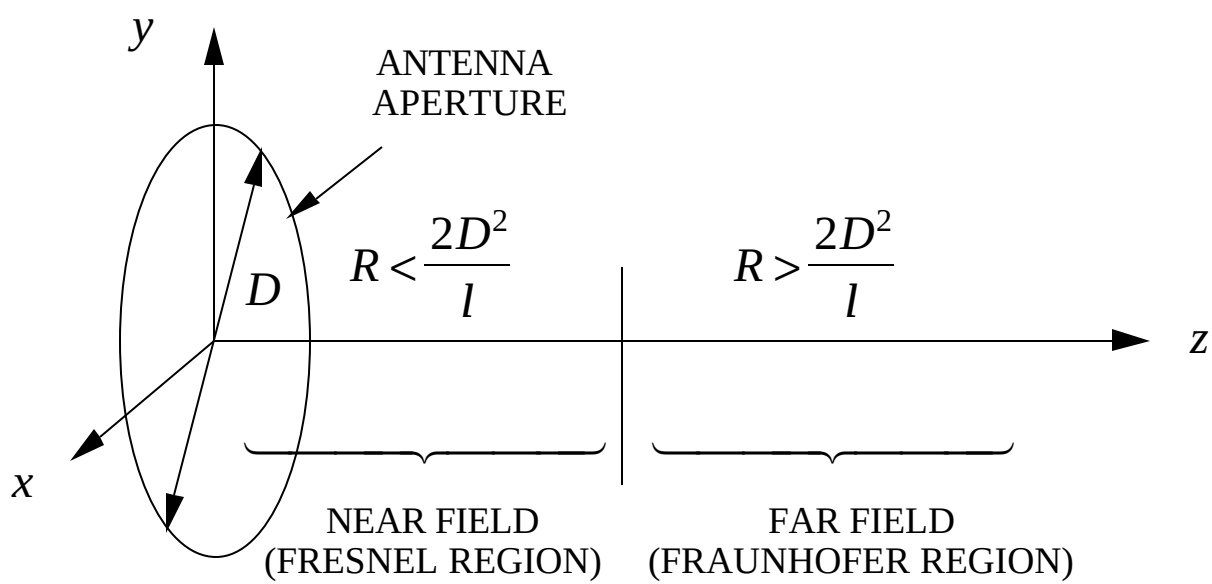

In the antenna far field:

1. $E_R = 0$
2. $E_q, E_f \propto 1/R$
3. wave fronts are spherical

Antenna Pattern Features

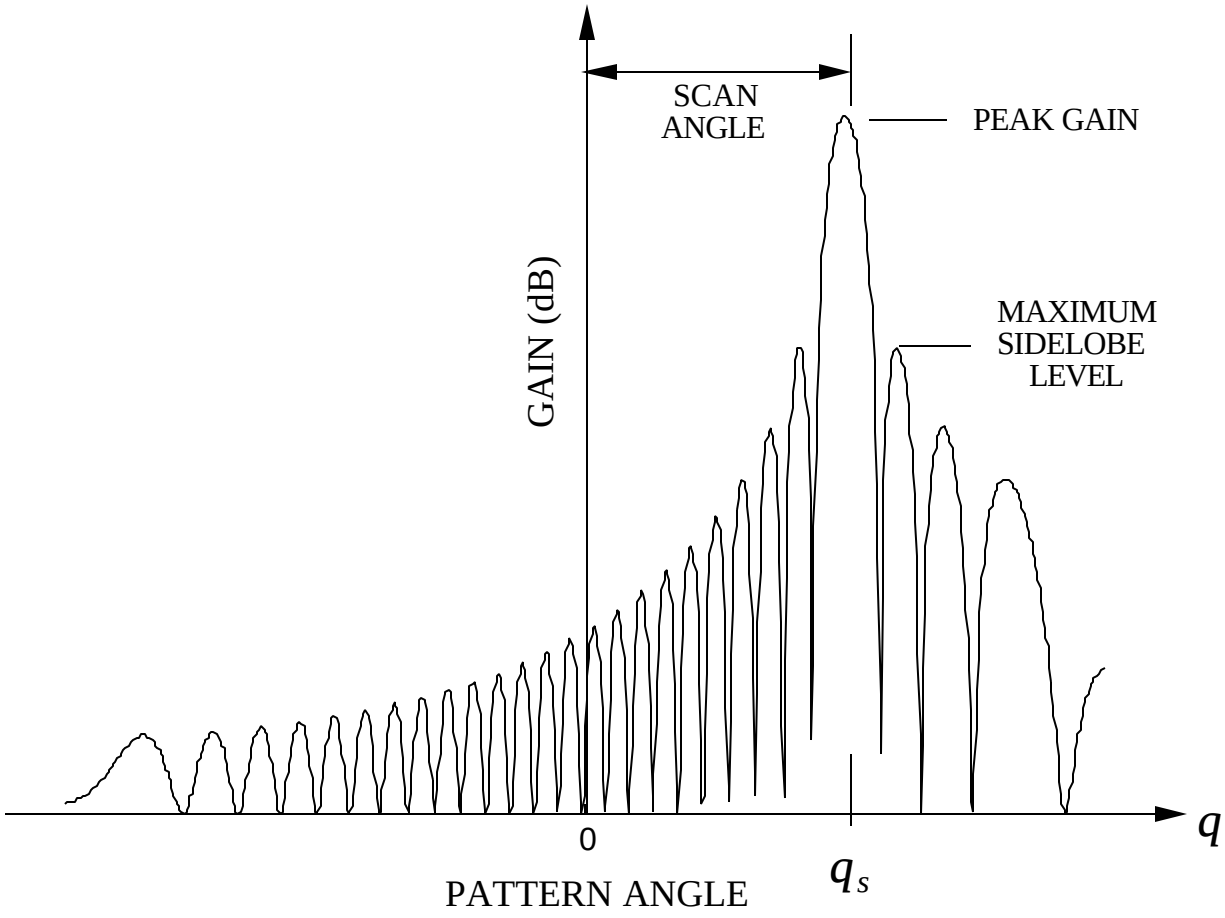

Antenna Refresher (2)

Directive gain is a measure of the antenna's ability to focus energy

$$G_D(q,f) = \frac{\text{radiation intensity in the direction } (q,f)}{\text{radiated power}/4p}$$

<u>Radiation intensity</u> in the direction (q,f) in units of W/sr (sr = steradian):

$$U(q,f) = R^2 \left|\vec{W}(q,f)\right| = \frac{R^2}{Z_o}\vec{E}(q,f)\cdot\vec{E}(q,f)^* = \frac{R^2}{Z_o}\left|\vec{E}(q,f)\right|^2$$

Maximum radiation intensity is $U_{\max} = U(q_{\max}, f_{\max}) = \dfrac{R^2}{Z_o}\left|\vec{E}_{\max}\right|^2$

Average radiation intensity:

$$U_{\text{ave}} = \frac{1}{4p}\int_0^p\int_0^{2p} U(q,f)\sin q\, dq\, df = \frac{1}{4p\, Z_o}\int_0^p\int_0^{2p}\left|\vec{E}(q,f)\right|^2 R^2 \sin q\, dq\, df$$

In the far-field of an antenna $E_R = 0$ and $E_q,\ E_f \propto 1/R$. The <u>beam solid angle</u> is

$$\Omega_A = \frac{1}{\left|\vec{E}_{\max}\right|^2}\int_0^p\int_0^{2p}\left|\vec{E}(q,f)\right|^2 \sin q\, dq\, df = \int_0^p\int_0^{2p}\left|\vec{E}_{\text{norm}}(q,f)\right|^2 \sin q\, dq\, df$$

(Skolnik uses B)

Antenna Refresher (3)

The directive gain can be written as

$$G_D(q,f) = \frac{4p}{\Omega_A}\left|\vec{E}_{\text{norm}}(q,f)\right|^2$$

The maximum value of the directive gain occurs in the direction of the main beam peak for a focused antenna. The maximum value of the directive gain is called the <u>directivity</u>. Since the maximum value of $\left|\vec{E}_{\text{norm}}(q,f)\right|^2$ is one,

$$G_D = G_D(q,f)\big|_{\max} = \frac{4p}{\Omega_A}$$

Directive gain only depends on the antenna pattern. It does not include any losses incurred in forming the pattern.

<u>Gain</u> includes the effect of loss

$$G(q,f) = G_D(q,f)r$$

where r is the <u>antenna efficiency</u>. Sources of loss depend on the particular type of antenna. Most electrically large antennas have losses due to nonuniform aperture illumination, r_a, and mismatch loss (reflection of energy at the input terminals), r_m. Therefore $r = r_a r_m$.

Directivity Example

An antenna has a far-field pattern of the form

$$\vec{E}(q,f) = \begin{cases} \hat{q}\, E_o \cos^n q \, \dfrac{e^{-jkR}}{R}, & q < p/2 \\ 0, & q > p/2 \end{cases}$$

where n is an integer. The normalized electric field is

$$\left|\vec{E}_{\text{norm}}\right| = \left|\frac{E_0 \cos^n q e^{-jkR}/R}{E_o e^{-jkR}/R}\right| = \left|\cos^n q\right|, \quad q < p/2$$

The resulting beam solid angle is

$$\Omega_A = \int_0^{p/2}\int_0^{2p} \left|\cos^n q\right|^2 \sin q \, dq \, df = 2p\left[-\frac{\cos^{2n+1} q}{2n+1}\right]_0^{p/2} = \frac{2p}{2n+1}$$

and directivity

$$G_D = \frac{4p}{\Omega_A} = \frac{4p}{2p/(2n+1)} = 2(2n+1)$$

Antenna Polarization Loss

Summary of <u>polarization losses</u> for polarization mismatched antennas

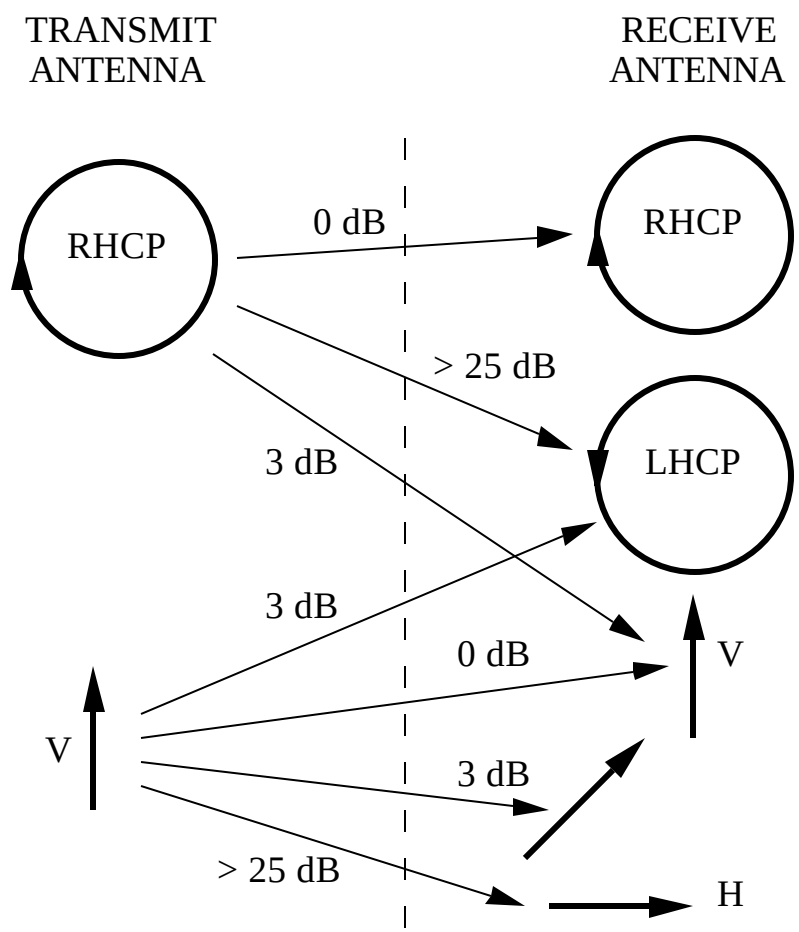

Parabolic Reflector Antenna

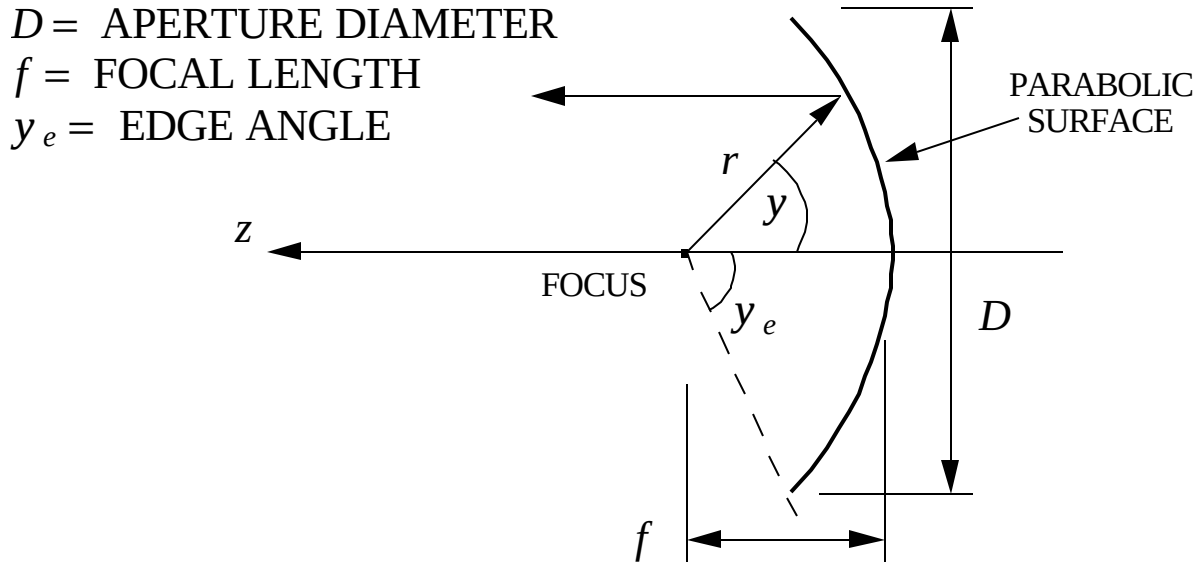

Spherical waves emanating from the focal point are converted to plane waves after reflection from the parabolic surface. The ratio f / D is a design parameter. Some important relationships:

$$r = \frac{2f}{1+\cos y}$$

$$y_e = 2\tan^{-1}\left(\frac{1}{4f/D}\right)$$

Parabolic Reflector Antenna Losses

1. Feed blockage reduces gain and increases sidelobe levels

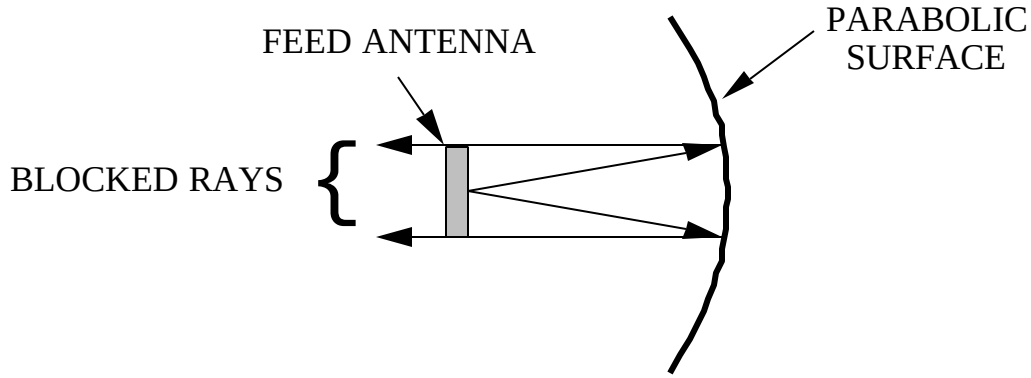

2. Spillover reduces gain

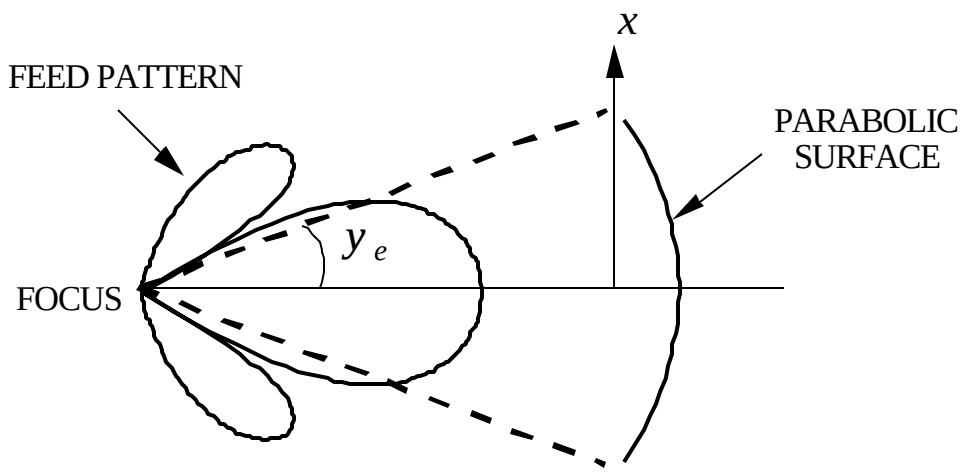

Example

A circular parabolic reflector with $f/D = 0.5$ has a feed with a pattern $E(y) = \cos y$ for $y \le p/2$. The aperture illumination is

$$A(y) = \frac{e^{-jkr}}{r}|E(y)| = \frac{e^{-jkr}}{r}\cos y$$

$$|A(y)| = \cos y(1+\cos y)/(2f)$$

$$y_e = 2\tan^{-1}\left(\frac{1}{4f/D}\right) = (2)(26.56) = 53.1^\circ$$

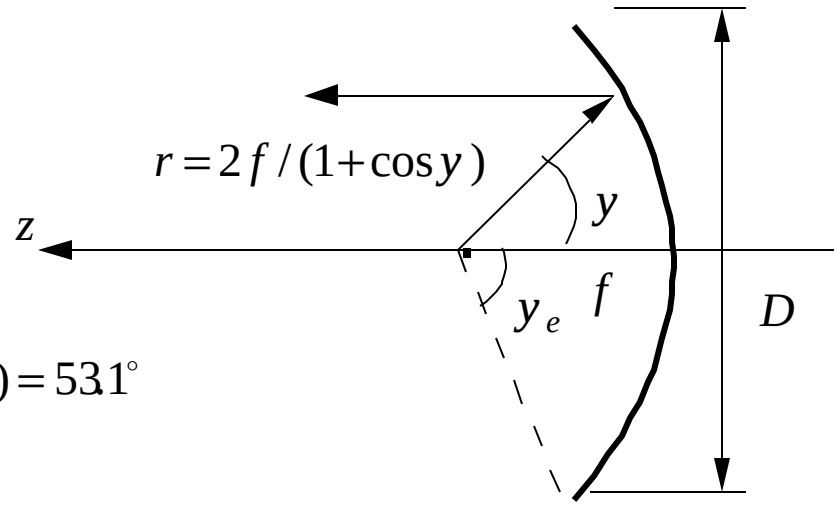

The <u>edge taper</u> is $\dfrac{|A(y_e)|}{|A(0)|} = \dfrac{\cos y_e(1+\cos y_e)/(2f)}{2/(2f)} = 0.4805 = -6.37\text{ dB}$

The feed pattern required for uniform illumination is

$$\frac{|A(y_e)|}{|A(0)|} = \frac{|E(y)|(1+\cos y)/2f}{|E(0)|/f} = \frac{|E(y)|(1+\cos y)}{2} \equiv 1 \Rightarrow |E(y)| = \frac{2}{1+\cos y} = \sec^2\left(\frac{y}{2}\right)$$

Example

The spillover loss is obtained from fraction of feed radiated power that falls outside of the reflector edge angles. The power intercepted by the reflector is

$$P_{\text{int}} = \int_0^{2p} \int_0^{y_e} \cos^2 y \ \sin y \ \ df \, dy \ = 2p \int_0^{y_e} \cos^2 y \ \sin y \ \ dy$$

$$= -2p \left[\frac{\cos^3 y}{3} \right]_0^{y_e} = 0.522p$$

The total power radiated by the feed is

$$P_{\text{rad}} = \int_0^{2p} \int_0^{p/2} \cos^2 y \ \sin y \ \ df \, dy \ = 2p \int_0^{p/2} \cos^2 y \ \sin y \ \ dy$$

$$= -2p \left[\frac{\cos^3 y}{3} \right]_0^{p/2} = 0.667p$$

Thus the fraction of power collected by the reflector is

$$P_{\text{int}} / P_{\text{rad}} = 0.522 / 0.667 = 0.78$$

This is the <u>spillover efficiency</u>, which in dB is $10 \log(0.78) = -1.08 \text{ dB}$.

Radiation by a Line Source (1)

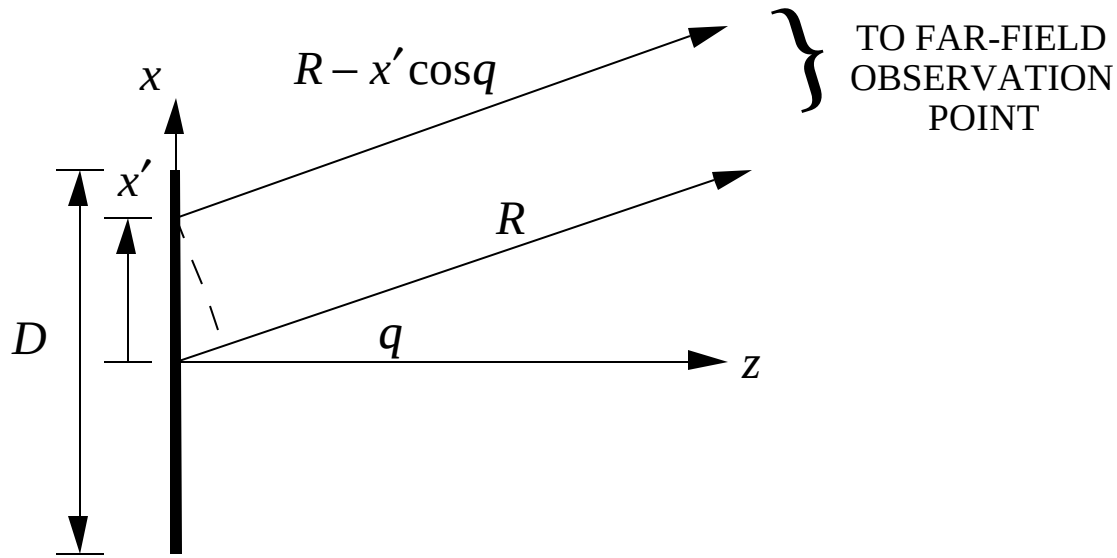

Differential radiated field at the observation point from a differential length of source located at x' (unit amplitude):

$$dE_x = \frac{jkZ_o}{4p}\frac{e^{-jk(R-x'\sin q)}}{|R-x'\sin q|}dx' \approx \frac{jkZ_o e^{-jkR}}{4p\,R}e^{jkx'\sin q}\,dx'$$

Radiation by a Line Source (2)

Assume that the amplitude and phase along the source vary as $A(x')$ and $\Psi(x')$. The total radiated field from the line source is:

$$E_x = \int dE_x = \frac{jkZ_o e^{-jkR}}{4p\,R} \int_{-D/2}^{D/2} A(x') e^{jk\Psi(x')} e^{jkx'\sin q}\, dx'$$

Note that this is in the form of a <u>Fourier transform</u> between the domains x' and $k\sin q$.

Example: $A(x') = 1$ and $\Psi(x') = 0$ (uniform illumination)

$$E_x = \int dE_x = \frac{jkZ_o e^{-jkR}}{4p\,R} \underbrace{\int_{-D/2}^{D/2} e^{jkx'\sin q}\, dx'}_{=D\,\mathrm{sinc}\left(\frac{kD}{2}\sin q\right)}$$

In the far-field only the q and f components exist

$$E_q = E_x \cos q = \frac{jk\,D\,Z_o e^{-jkR}}{4p\,R} \cos q\, \mathrm{sinc}\left(\frac{kD}{2}\sin q\right)$$

Note that $E_f = E_x \sin f = 0$ since $f = 0$. A uniform aperture function is a "spatial pulse" and its Fourier transform is a sinc function in the spatial frequency domain ($k\sin q$).

Array Antennas (1)

Arrays are collections of antennas that are geometrically arranged and excited to achieve a desired radiation pattern. Example: a linear array of dipoles

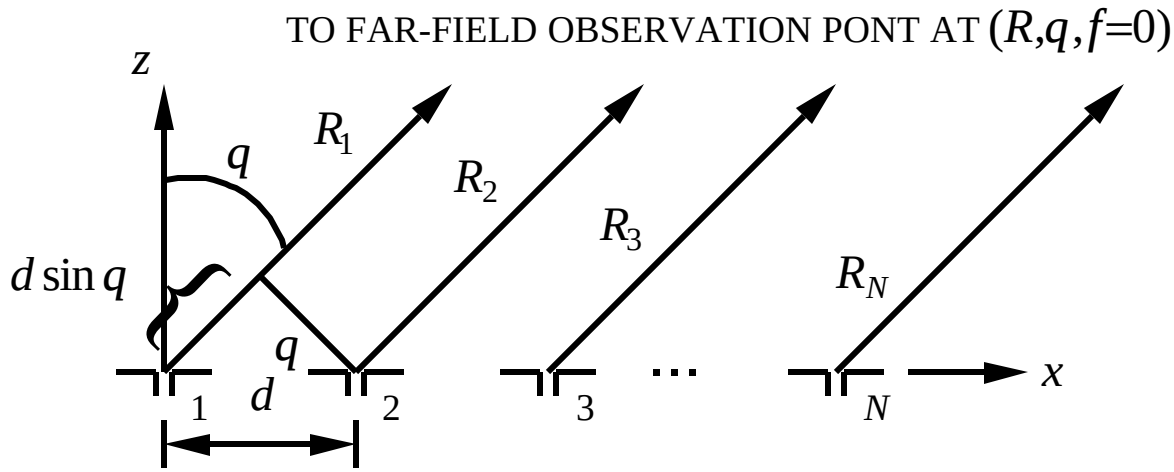

Assume:

1. equally spaced elements
2. uniformly excited (equal power to all elements)
3. identical elements
4. neglect "edge effects" (mutual coupling changes near edges)

In the far field vectors from the elements to the observation point are approximately parallel so that $R_n = R_1 - (n-1)d \sin q$

Array Antennas (2)

The <u>element pattern</u> for the array is the radiation pattern (E_q) of a short dipole of length Δ ($\Delta << l$)

$$g_n(q) = \frac{jI_o\Delta}{4p}\frac{e^{-jkR_n}}{R_n}Z_o k\cos q = \frac{jI_o\Delta}{4p}\frac{e^{-j(kR_1-(n-1)y)}}{R_1}Z_o k\cos q = g_1(q)e^{j(n-1)y}$$

where $y = kd\sin q$. Since $R_n >> nd\sin q$ we have replaced R_n in the denominator with R_1 which is approximately R_n. The total far field of the array is given by

$$E(q) = \sum_{n=1}^{N} g_n(q) = g_1(q)\sum_{n=1}^{N} e^{jkd(n-1)\sin q} = g_1(q)\sum_{n=0}^{N-1}\left(e^{jy}\right)^n$$

$$= g_1(q)\frac{1-e^{jNy}}{1-e^{jy}} = g_1(q)\frac{\sin(Ny/2)}{\sin(y/2)}e^{j(N-1)y/2}$$

The magnitude gives the radiation pattern magnitude

$$|E(q)| = |g_1(q)|\left|\frac{\sin(Ny/2)}{\sin(y/2)}\right| = \left|\begin{array}{c}\text{ELEMENT}\\ \text{FACTOR (EF)}\end{array}\right| \cdot \left|\begin{array}{c}\text{ARRAY}\\ \text{FACTOR (AF)}\end{array}\right|$$

This result holds in general for an array of identical elements and is referred to as the <u>principle of pattern multiplication</u>. The <u>array factor</u> is only a function of the array geometry and excitation; the <u>element factor</u> only depends on the element characteristics.

Visible Region

The region of the array factor that corresponds to $-90^\circ \le q \le 90^\circ$ is referred to as the <u>visible region</u>.

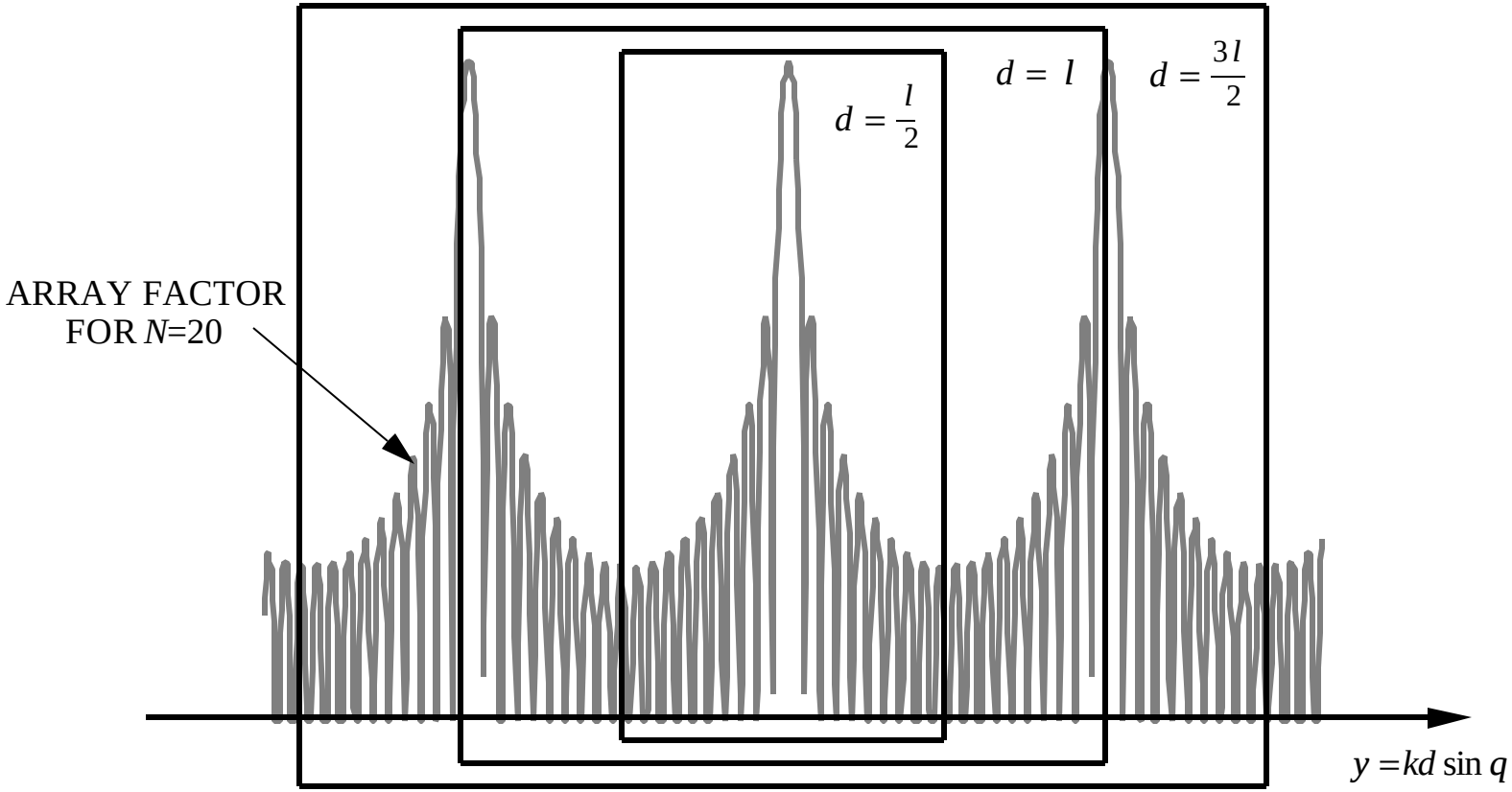

Array Antennas (3)

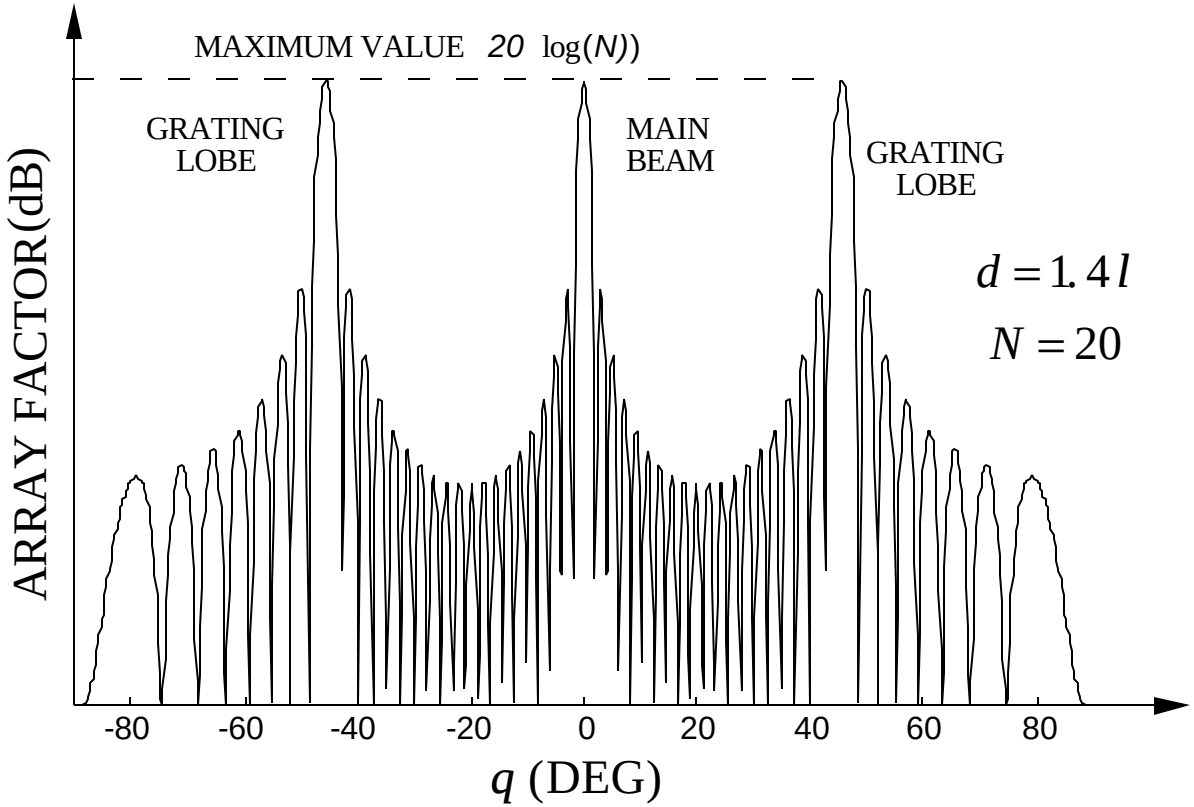

Grating lobes occur when the denominator of the array factor is zero, or

$$y_m / 2 = pm \Rightarrow \sin q_m = m\,l\,/\,d \Rightarrow q_m = \sin^{-1}(m\,l\,/\,d)$$

for $m = \pm 1, \pm 2, \ldots$

Array Antennas (4)

Recall that there is a Fourier transform relationship between a continuous aperture distribution $A(x')$ and the radiation pattern $E(k\sin q)$. An array can be viewed as a sampled version of a continuous aperture, and therefore the array excitation function and far-field pattern are related by the discrete Fourier transform. The discrete Fourier transform is usually implemented using the fast Fourier transform (FFT) algorithm. Note the similarity between the FFT and Butler matrix. Grating lobes are a form of aliasing, which occurs because the Nyquist sampling theorem has been violated.

Cooley-Tukey FFT (1965)

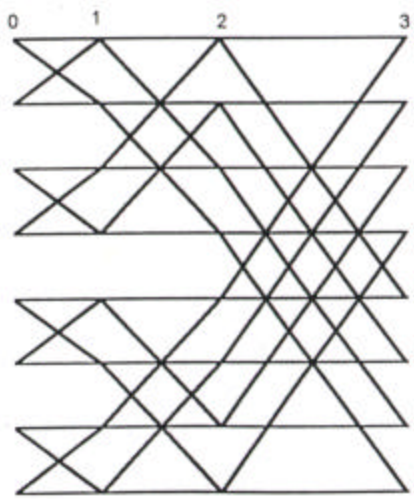

Butler matrix feed (1960)

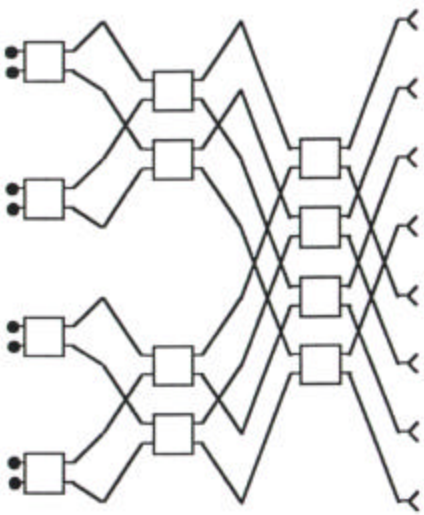

Array Factor for 2D Arrays

Previous results for one dimension can be extended to two dimensions. Let the array lie in the $x-y$ plane with element spacings d_x and d_y. The number of elements are N_x and N_y. For large arrays with no grating lobes the gain can be expressed as

$$G(q,f)=\frac{4pA_p r}{l^2}\underbrace{\left|\frac{g_1(q,f)}{g_{1\max}}\right|^2}_{\text{NORMALIZED ELEMENT FACTOR}}\underbrace{\left|\frac{\sin(N_x(y_x-y_{sx})/2)}{N_x\sin((y_x-y_{sx})/2)}\right|^2\left|\frac{\sin(N_y(y_y-y_{sy})/2)}{N_y\sin((y_y-y_{sy})/2)}\right|^2}_{\text{NORMALIZED ARRAY FACTOR}}$$

where

$$y_x=kd_x\sin q\cos f,\quad y_{sx}=kd_x\sin q_s\cos f_s$$
$$y_y=kd_y\sin q\sin f,\quad y_{sy}=kd_y\sin q_s\sin f_s$$

The physical area of the array is approximately $A_p=d_xd_yN_xN_y$. The main beam direction is given by (q_s,f_s).

Gain of Phased Arrays

From the definition of directive gain:

$$G_D = \frac{4p}{\Omega_A}\left|\vec{E}_{\text{norm}}\right|^2$$

This cannot be reduced to a closed form expression in general. However, assuming that the principle of pattern multiplication holds and that the array is large

$$G_D = \frac{4pA_e}{l^2}\left|\text{AF}_{\text{norm}}(q,f)\right|^2 \left|g_{\text{norm}}(q,f)\right|^2$$

where the subscript "norm" denotes normalized (i.e., divided by the maximum value). As usual, $A_e = rA_p$ (efficiency times physical aperture area)

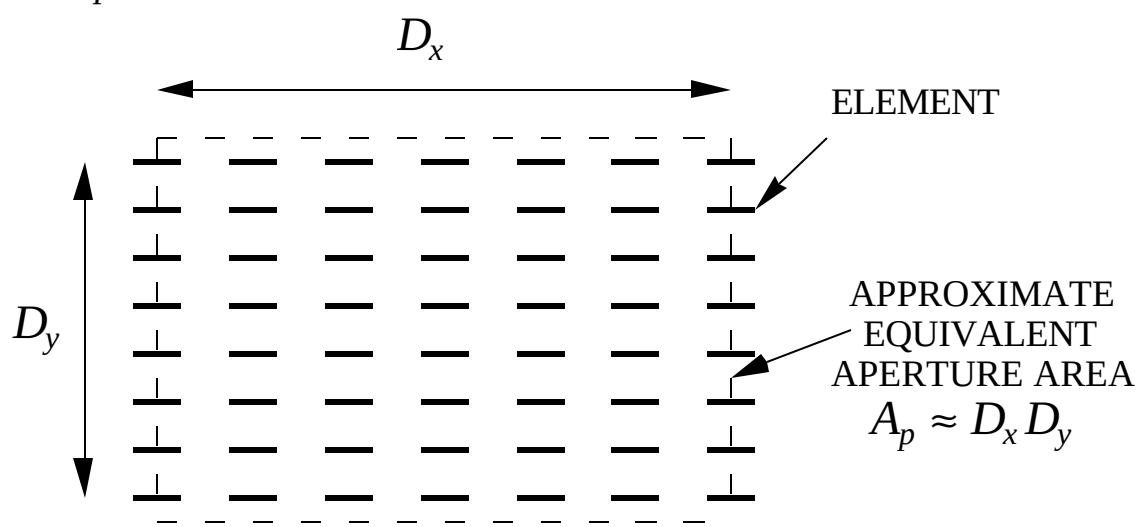

Array Elements and Ground Planes

Ground planes are used to increase directivity. If the ground plane is a perfect conductor and infinite, the method of images can be used. For a horizontal dipole:

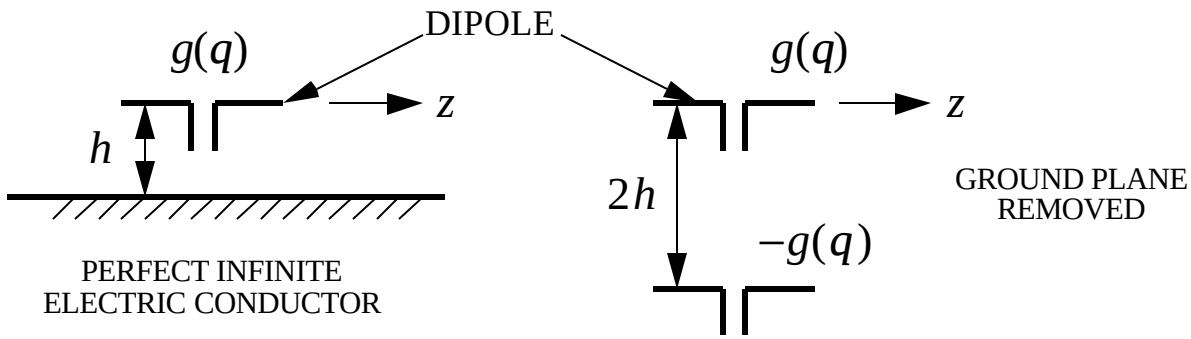

For a vertical dipole:

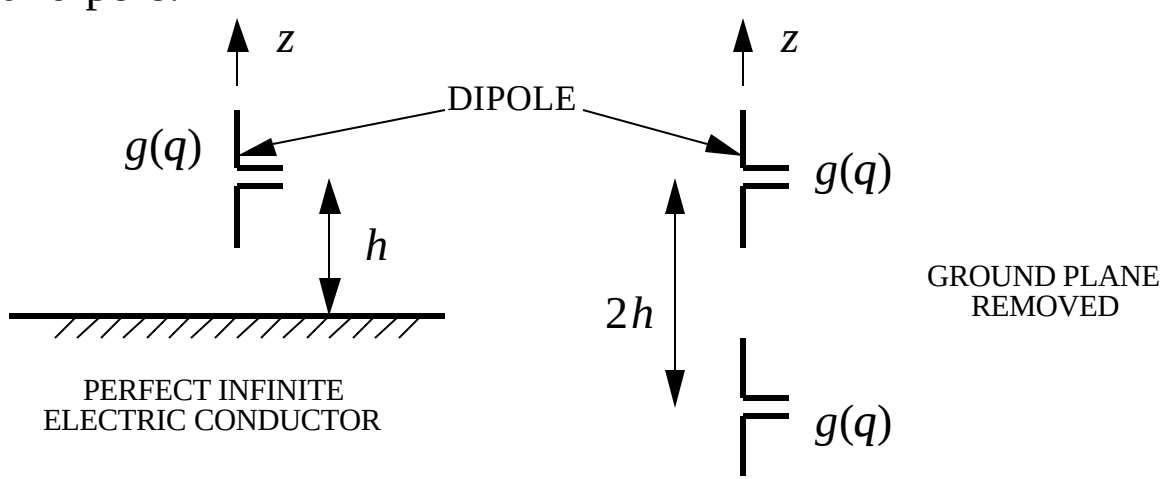

Array of Dipoles Above a Ground Plane

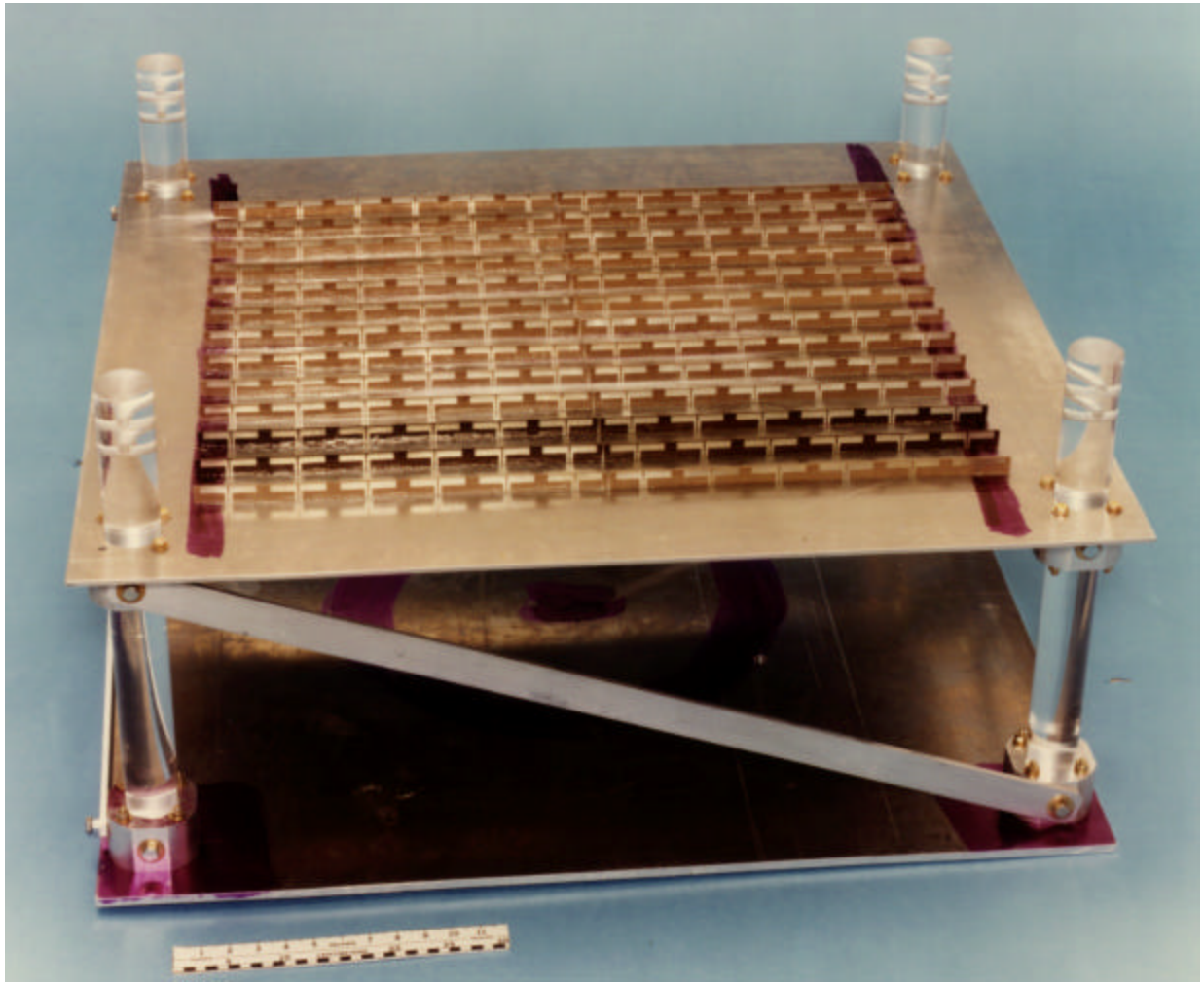

Series Fed Waveguide Slot Arrays

Low Probability of Intercept Radar (LPIR)

Low probability of intercept (LPI) strategy employs:

1. Wideband "noise-like" waveforms

2. Limit radiated power to the absolute minimum required for tracking or detection (power management). Low P_t also reduces clutter illumination. Sensitivity time control (STC) can be used in conjunction with power management to reduce clutter return by reducing the receiver gain for near-in targets. Reducing G as a function of R is equivalent to reducing G as a function of t.

3. Control spatial radiation characteristics:

   low sidelobe levels
   narrow beams
   rapid scanning (short target dwells)

Low and Ultra Low Sidelobes

Definitions (not standardized):

Classification	Maximum Sidelobe Level Relative to Peak
Low sidelobes	-20 to –40 dB
Ultra-low sidelobes	less than –40 dB

Typical "state-of-the-art" for a large array is –40 dB

Motivation includes: Low observability and low probability of intercept
Anti-jam
Reduced clutter illumination

Common low sidelobe distributions:

Taylor, modified Taylor (sum beams)
Bayliss (difference beams)

Practical limitations: Manufacturing and assembly errors

Antenna Pattern Control

Common aperture distribution functions:

1. Chebyshev: yields the minimum beamwidth for a specified sidelobe level; all sidelobes are equal; only practical for a small number of elements.
2. Binomial: has no sidelobes; only practical for a small number of elements.
3. Taylor: specify the maximum sidelobe level and rate of falloff of sidelobe level.
4. Cosine-on-a-pedestal: (cosine raised to a power plus a constant) wide range of sidelobe levels and falloff rates; Hamming window is one of these.
5. Bayliss: for low sidelobe difference beams.

Pattern synthesis: given a specified pattern, find the required aperture distribution

1. Fourier-integral method: take the inverse Fourier transform of the far-field pattern to obtain the aperture distribution.
2. Woodward's method: use the sinc(·) as a sampling function and find the required weights to match the desired pattern.

For a focused beam the amplitude distribution is always symmetric about the center of the array. To scan a focused beam a linear phase is introduced across the antenna aperture.

Tapered Aperture Distributions

The shape of the aperture distribution can be used to reduce the sidelobes of the radiation pattern.

Advantages	Disadvantages
reduced clutter return	more complicated feed
low probability of intercept	reduced gain
less susceptible to jamming	increased beamwidth

Performance can be computed from Table 9.1 in Skolnik

λ = wavelength; a = aperture width

Type of distribution, $\lvert z \rvert < 1$	Relative gain	Half-power beamwidth, deg	Intensity of first sidelobe, dB below maximum intensity
Uniform; $A(z) = 1$	1	$51\lambda/a$	13.2
Cosine; $A(z) = \cos^n(\pi z/2)$:			
$n = 0$	1	$51\lambda/a$	13.2
$n = 1$	0.810	$69\lambda/a$	23
$n = 2$	0.667	$83\lambda/a$	32
$n = 3$	0.575	$95\lambda/a$	40
$n = 4$	0.515	$111\lambda/a$	48
Parabolic; $A(z) = 1 - (1 - \Delta)z^2$:			
$\Delta = 1.0$	1	$51\lambda/a$	13.2
$\Delta = 0.8$	0.994	$53\lambda/a$	15.8
$\Delta = 0.5$	0.970	$56\lambda/a$	17.1
$\Delta = 0$	0.833	$66\lambda/a$	20.6
Triangular; $A(z) = 1 - \lvert z \rvert$	0.75	$73\lambda/a$	26.4
Circular; $A(z) = \sqrt{1 - z^2}$	0.865	$58.5\lambda/a$	17.6
Cosine-squared plus pedestal;			
$0.33 + 0.66 \cos^2(\pi z/2)$	0.88	$63\lambda/a$	25.7
$0.08 + 0.92 \cos^2(\pi z/2)$, Hamming	0.74	$76.5\lambda/a$	42.8

Calculation of Aperture Efficiency

Continuous aperture

$$r_a = \frac{\left|\int_{-L_x/2}^{L_x/2}\int_{-L_y/2}^{L_y/2} A(x,y)\,dx\,dy\right|^2}{A_p\int_{-L_x/2}^{L_x/2}\int_{-L_y/2}^{L_y/2} |A(x,y)|^2\,dx\,dy}$$

Discrete Array

$$r_a = \frac{\left|\sum_{n=1}^{N_x}\sum_{m=1}^{N_y} A_{mn}\right|^2}{N_x N_y \sum_{n=1}^{N_x}\sum_{m=1}^{N_y} |A_{mn}|^2}$$

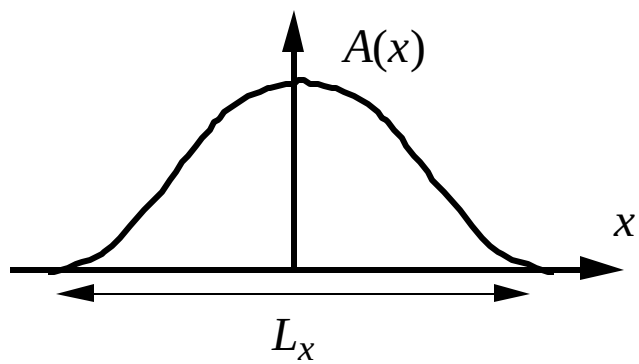

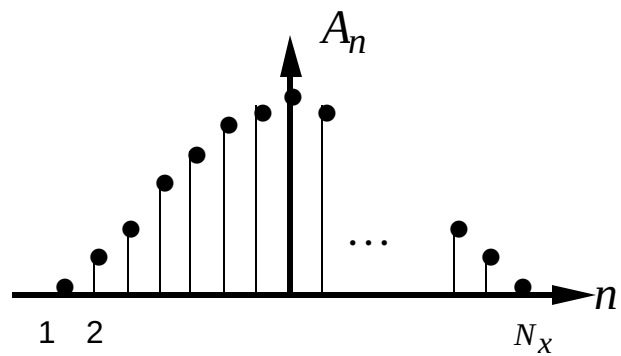

Example: Cosine distribution: $A(x) = \cos\{px/L_x\}, \quad -L_x/2 \le x \le L_x/2$

$$r_a = \frac{\left|\int_{-L_x/2}^{L_x/2}\cos\{px/L_x\}dx\right|^2}{L_x\int_{-L_x/2}^{L_x/2}\left|\cos\{px/L_x\}\right|^2 dx} = \frac{\left\{2\int_{0}^{L_x/2}\cos\{px/L_x\}dx\right\}^2}{2L_x\int_{0}^{L_x/2}\cos^2\{px/L_x\}dx} = \frac{4(L_x/p)^2}{2L_x(L_x/4)} = \frac{8}{p^2} \approx -0.91\,\text{dB}$$

Cosecant-Squared Antenna Pattern

$$P_r \propto \frac{G^2}{R^4}$$

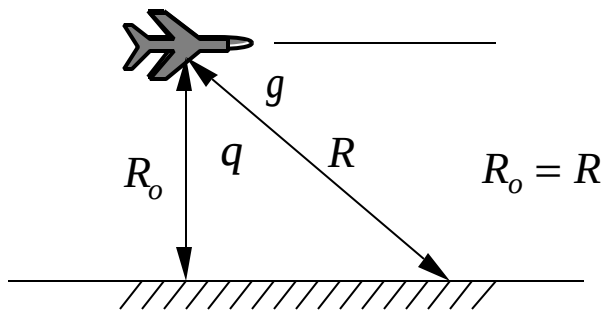

$$R_o = R\cos q$$

For uniform ground illumination: $\dfrac{G(0)^2}{R_o^4} = \dfrac{G(q)^2}{R^4} \quad \Rightarrow \quad G(q) = G(0)\dfrac{R^2}{R_o^2} = G(0)\csc^2 g$

Typical pattern:

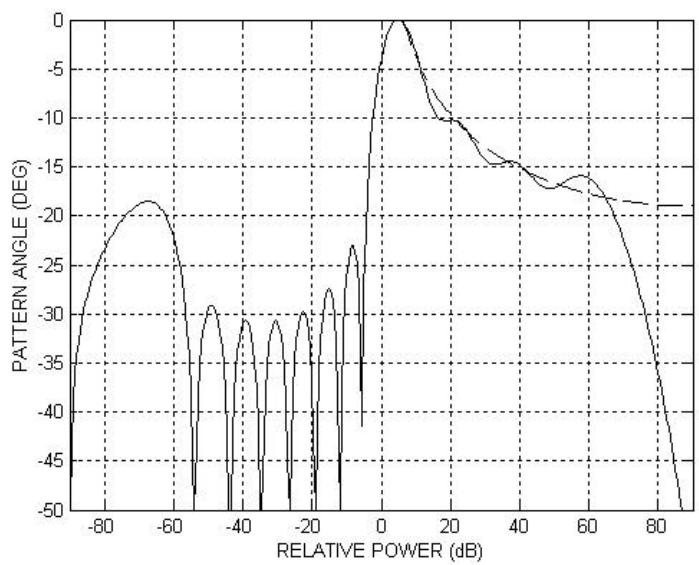

Example

Fan beam generated by a cylindrical paraboloid with a line source that provides uniform illumination in azimuth but $\cos(py'/D_y)$ in elevation

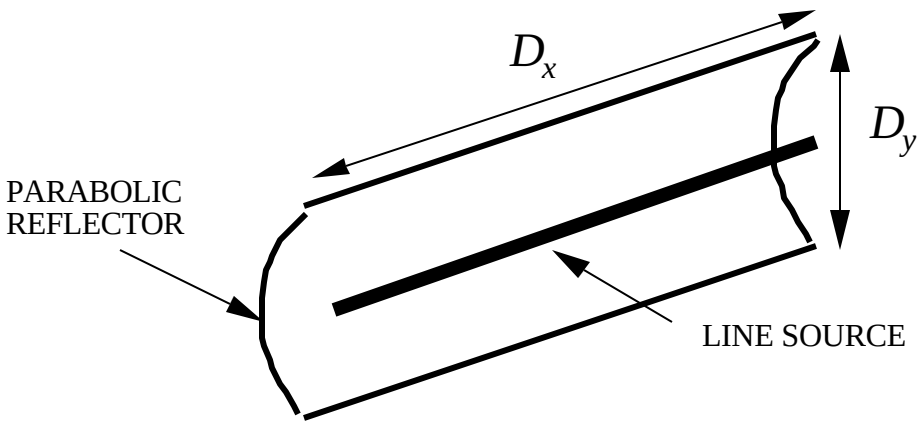

Sidelobe levels from Table 9.1

- uniform distribution in azimuth (x):
  SLL = 13.2 dB
- cosine in elevation (y):
  SLL = 23 dB

Find D_x and D_y for azimuth and elevation beamwidths of 2 and 12 degrees

$$q_{\text{el}} = 69\,l\,/\,D_y = 12^\circ \Rightarrow D_y = 5.75\,l$$

$$q_{\text{az}} = 51\,l\,/\,D_x = 2^\circ \Rightarrow D_x = 25.5\,l$$

The aperture efficiency is $r_a = (1)(0.81)$ and the gain is

$$G = \frac{4pA_p}{l^2}\,r = \frac{4p(5.75\,l)(25.5\,l)}{l^2}(1)(0.81) = 1491.7 = 31.7 \text{ dB}$$

Array Example (1)

Design an array to meet the following specifications:

1. Azimuth sidelobe level 30 dB
2. $\pm$ 45 degree scan in azimuth; no elevation scan; no grating lobes
3. Elevation HPBW of 5 degrees
4. Gain of at least 30 dB over the scan range

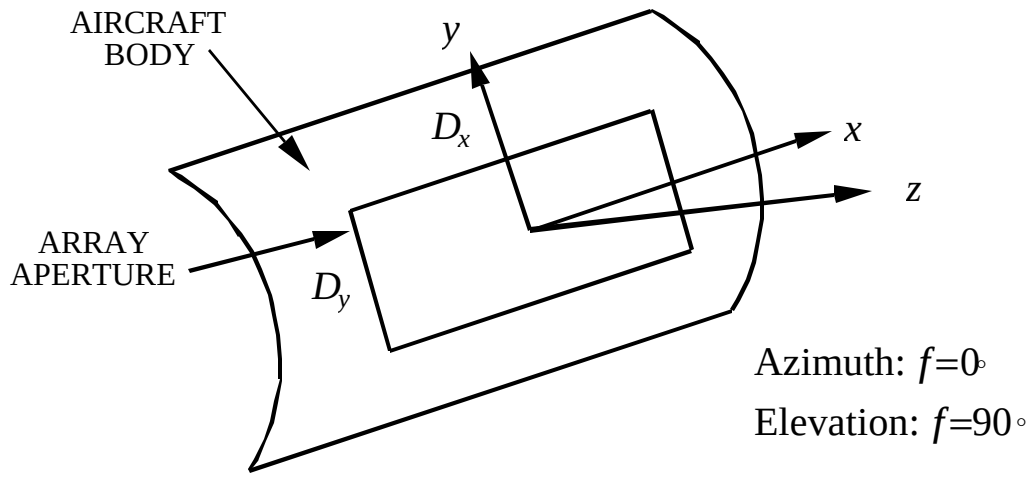

Restrictions:

1. Elements are vertical ($\hat{y}$) dipoles over a ground plane
2. Feed network estimated to have 3 dB of loss
3. Dipole spacings are: $0.4l \le d_x \le 0.8l$ and $0.45l \le d_y \le 0.6l$

Array Example (2)

Restrictions (continued):

4. errors and imperfections will increase the SLL about 2 dB so start with a -32 dB sidelobe distribution ($r_a = 0.81$): $A(x') = 0.2 + 0.8\cos^2(px'/2)$
5. minimize the number of phase shifters used in the design

Step 1: start with the gain to find the required physical area of the aperture

$$G = G_D r = \frac{4pA_p}{l^2} r \cos q \geq 30\,\text{dB}$$

$\cos q$ is the projected area factor, which is a minimum at 45 degrees. The efficiency includes tapering efficiency (0.81) and feed loss (0.5). Therefore

$$G = \frac{4pA_p}{l^2}(0.707)(0.81)(0.5) = 10^3$$

or, $A_p / l^2 = (D_x / l)(D_y / l) \approx (N_x d_x / l)(N_y d_y / l) = 278.1.$

Step 2: uniform illumination in elevation; must have a HPBW of 5 degrees

$$\left| \frac{\sin\left(N_y k d_y \sin q / 2\right)}{N_y \sin\left(k d_y \sin q / 2\right)} \right|_{q=2.5^\circ} = 0.707 \quad \Rightarrow \quad D_y = N_y d_y = 10\,l$$

Array Example (3)

This leads to $D_x = A_p / D_y = 28\,l$. To minimize the number of elements choose the largest allowable spacing: $d_y = 0.6\,l \quad \Rightarrow \quad N_y = D_y / d_y = 17$

<u>Step 3</u>: azimuth spacing must avoid grating lobes which occur when

$$\sin q_n - \sin q_s = n\,l\,/\,d_x \qquad (q_n \le -90^\circ, n = -1, q_s = 45^\circ)$$
$$-1 - 0.707 = -l\,/\,d_x \quad \Rightarrow \quad d_x \le 0.585\,l$$

Again, to minimize the number of elements, use the maximum allowable spacing ($0.585\,l$) which gives $N_x = D_x / d_x = 48$. Because the beam only scans in azimuth, one phase shifter per column is sufficient.

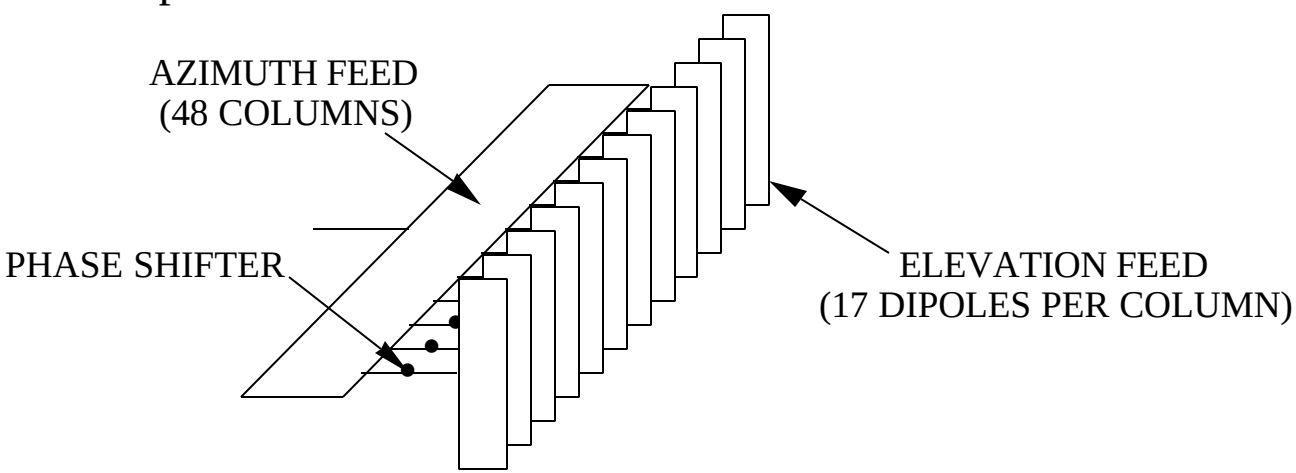

Array Example (4)

Step 4: Find the azimuth beamwidth at scan angles of 0 and 45 degrees. Letting $q_H = q_B/2$

$$\left|\frac{\sin\left(N_x k d_x(\pm\sin q_H - \sin q_s)/2\right)}{N_x \sin\left(k d_x(\pm\sin q_H - \sin q_s)/2\right)}\right| = 0.707$$

Solve this numerically for $q_s = 0$ and 45 degrees. Note that the beam is not symmetrical when it is scanned to 45 degrees. Therefore the half power angles are different on the left and right sides of the maximum

$$q_s = 0^\circ: \quad q_{H^+} = -q_{H^-} = 0.91^\circ \quad \Rightarrow \quad \text{HPBW}, q_B = q_{H^+} - q_{H^-} = 2(0.91) = 1.82^\circ$$

$$q_s = 45^\circ: \quad q_{H^+} = 46.3^\circ, q_{H^-} = 43.75^\circ \quad \Rightarrow \quad \text{HPB}W, q_B = 46.3^\circ - 43.75^\circ = 2.55^\circ$$

We have not included the element factor, which will affect the HPBW at 45 degrees.

Calculation of Antenna Temperature

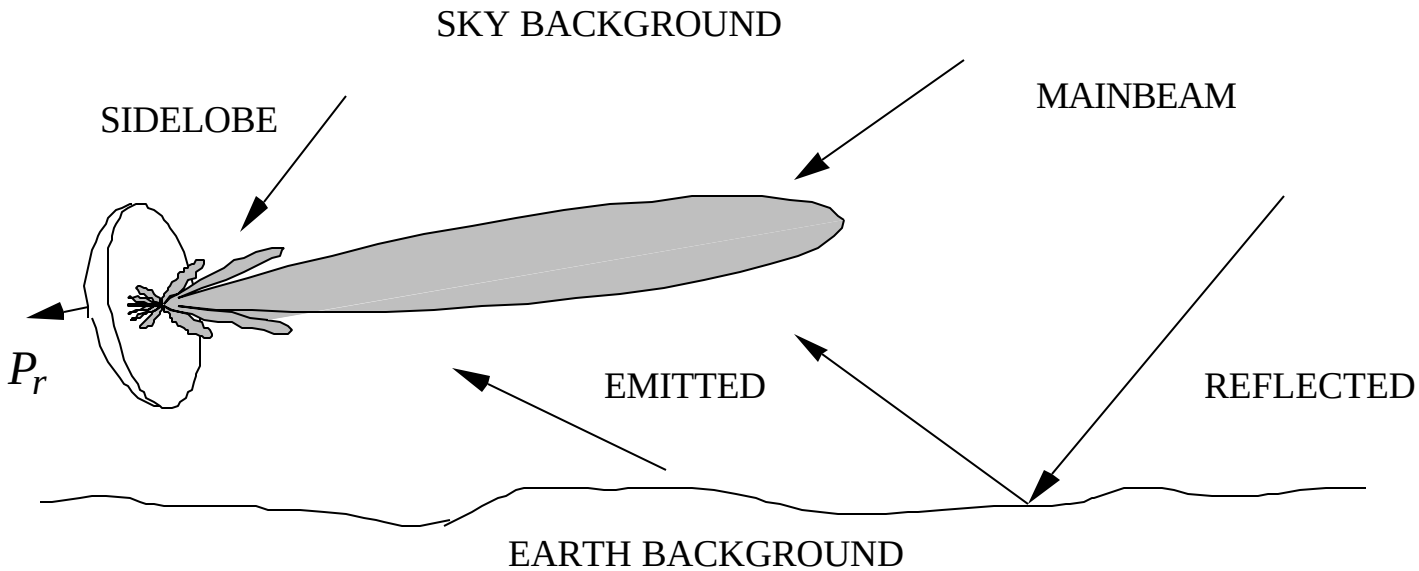

The antenna collects noise power from background sources. The noise level can be characterized by the <u>antenna temperature</u>

$$T_A = \frac{\int_0^{p}\int_0^{2p} T_B(q,f)\,G(q,f)\sin q\,dq\,df}{\int_0^{p}\int_0^{2p} G(q,f)\sin q\,dq\,df}$$

T_B is the background brightness temperature and G the antenna gain.

Multiple Beam Antennas (1)

Several beams share a common aperture (i.e., use the same radiating elements)

Arrays

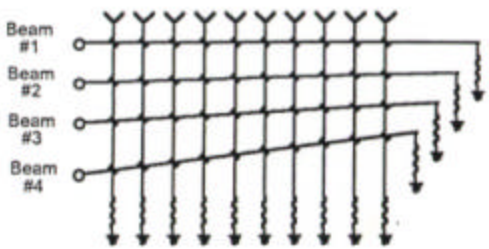

Reflectors

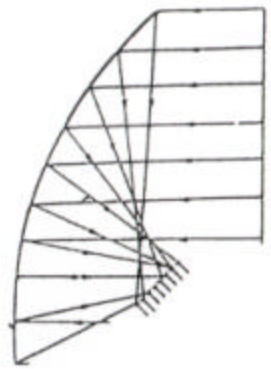

Lenses

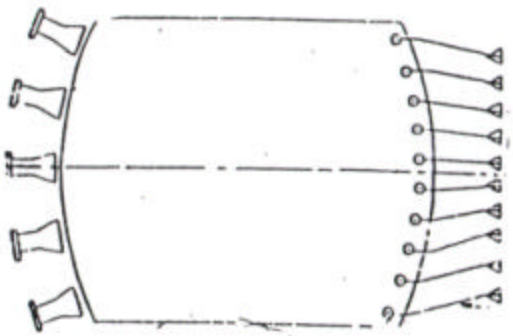

Advantages: Cover large search volumes quickly
Track multiple targets simultaneously
Form "synthetic" beams

Disadvantages: Beam coupling loss
Increased complexity in the feed network

Sources of beam coupling loss: (1) leakage and coupling of signals in the feed network, and (2) non-orthogonality of the beam patterns

Multiple Beam Antennas (2)

Multiple beams are a means of increasing the rate of searching radar resolution cells (i.e., the radar system bandwidth). The overall system bandwidth depends on the number of range cells (N_{range}), doppler cells (N_{dop}), and angle cells (N_{ang}):

$$N_{\text{sys}} = N_{\text{range}} \times N_{\text{dop}} \times N_{\text{ang}}$$

$$N_{\text{sys}} = \left(\frac{1}{f_p t}\right) \times \left(f_p t_{ot}\right) \times \underbrace{\left(\frac{\Omega_s}{q_e q_a}\right)}_{t_f / t_{ot}} = \frac{t_f}{t}$$

The bandwidth of the system can be increased by adding more beams and receivers. If the instantaneous bandwidth of a receiver is $B \approx 1/t$ and m channels are used then

$$N_{\text{sys}} = t_f B_{eff} \quad \Rightarrow \quad B_{eff} = mB$$

Example: A radar with 8 beams, a pulse width of $0.25\,ms$, and a rotation rate of 10 rpm ($t_f = 6$ sec) has $N_{\text{sys}} = \dfrac{(6)(8)}{0.25 \times 10^{-6}} = 2 \times 10^8$ resolution cells and an effective system bandwidth of 32 MHz.

Radiation Patterns of a Multiple Beam Array

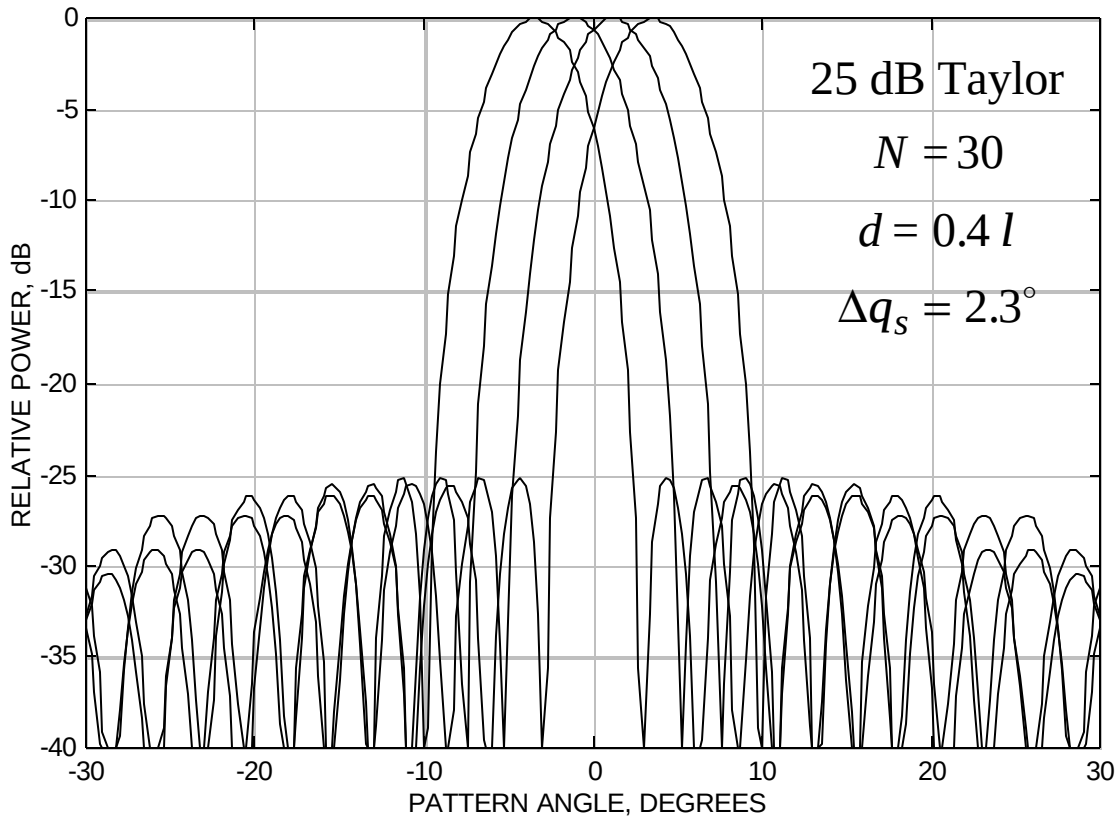

Beam Coupling Losses for a 20 Element Array

2 Beams

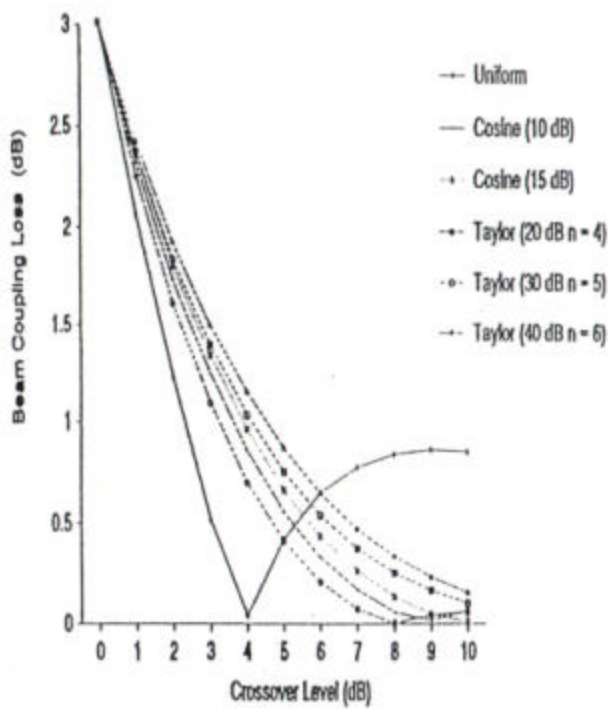

4 Beams

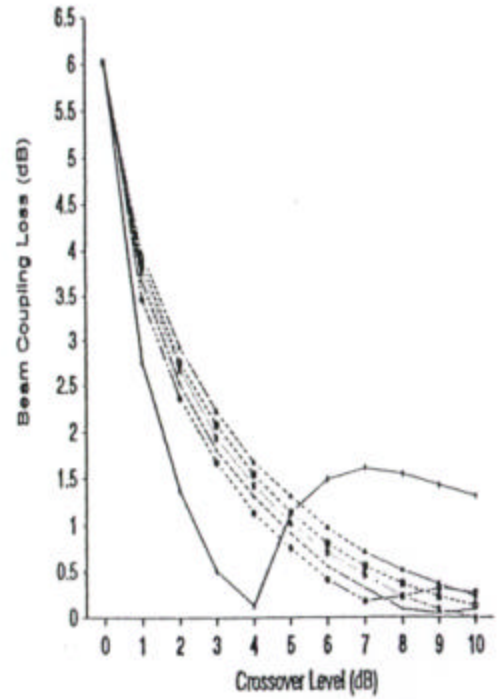

For m and n to be orthogonal beams: $\frac{1}{Z_o}\int_0^p\int_0^{2p}\vec{E}_m(q,f)\cdot\vec{E}_n^*(q,f)R^2\sin q\,dq\,df=0$

Example: If the beams are from a uniformly illuminated line source then $\vec{E}_n(q,f)$, $\vec{E}_m(q,f)\propto\text{sinc}(\cdot)$ and adjacent beams are orthogonal if the crossover level is 4 dB.

Active vs. Passive Antennas

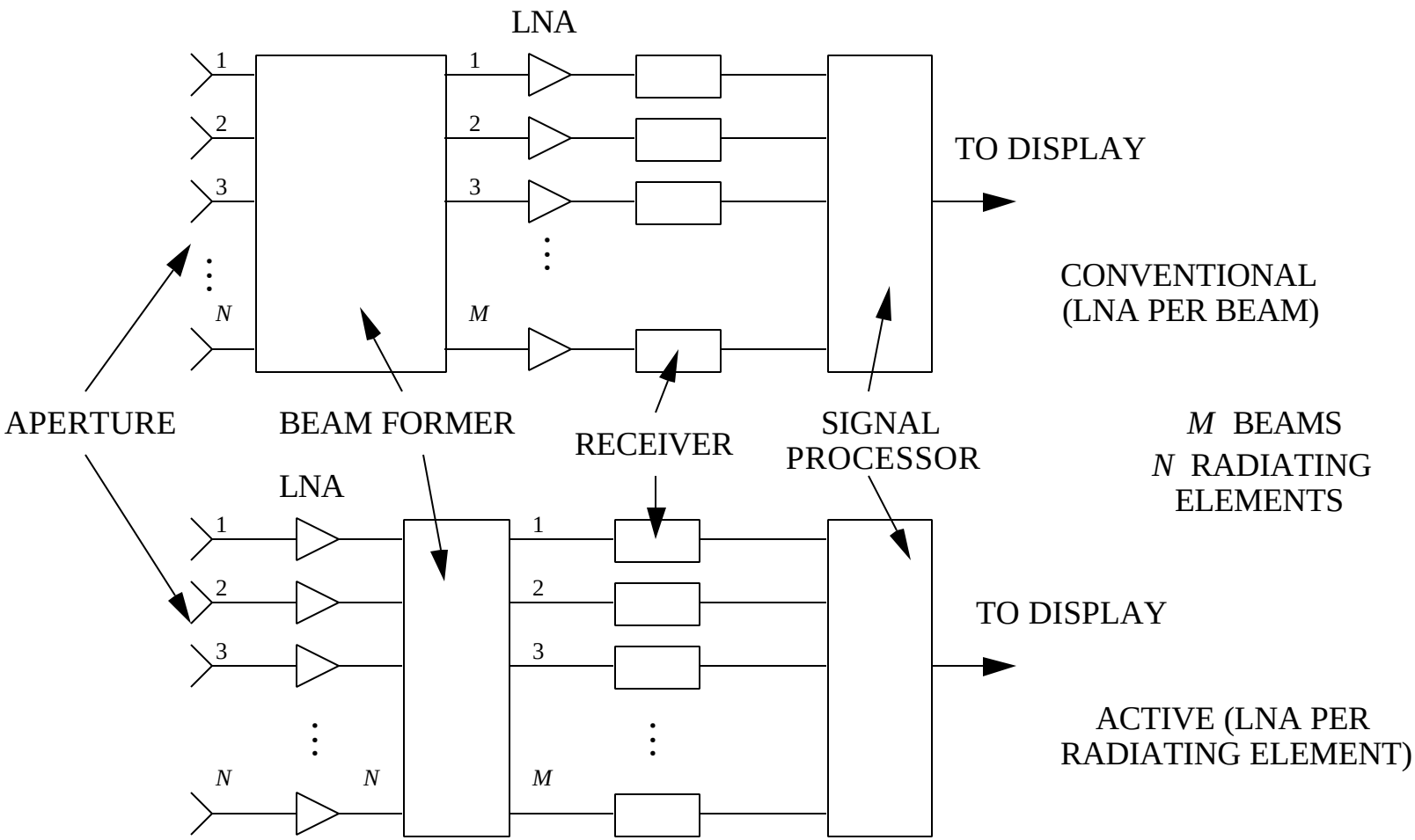

SNR Calculation for a Lossless Feed Network

Amplification after beamforming

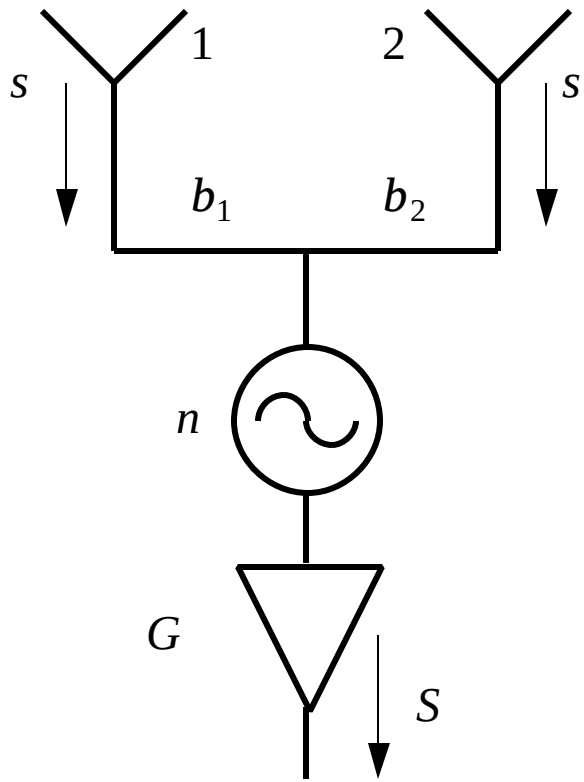

Amplification before beamforming

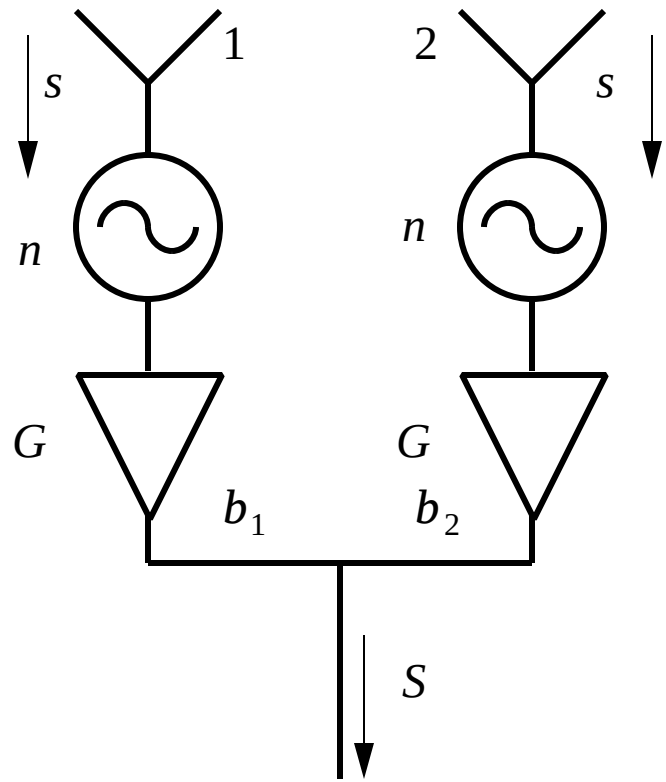

The power coupling coefficients are b_1 and b_2. For a lossless coupler $b_1 + b_2 = 1$.

SNR Calculation for a Lossless Feed Network

Amplification after beamforming:

$$N = nG$$

$$S = \left(\sqrt{s}\sqrt{b_1}\sqrt{G} + \sqrt{s}\sqrt{b_2}\sqrt{G}\right)^2 = sG\left(\sqrt{b_1} + \sqrt{b_2}\right)^2$$

$$\frac{S}{N} = \frac{sG\left(\sqrt{b_1} + \sqrt{b_2}\right)^2}{nG(b_1 + b_2)} = 2\,r_a\,\frac{s}{n}$$

where $r_a = \dfrac{\left(\sqrt{b_1} + \sqrt{b_2}\right)^2}{2(b_1 + b_2)}$ is the aperture efficiency. Since $\dfrac{s}{n}$ is the SNR for a single element, if $r_a = 1$ then the gain is 2.

Amplification before beamforming:

$$N = nGb_1 + nGb_2 = nG$$

$$S = sG\left(\sqrt{b_1} + \sqrt{b_2}\right)^2$$

$$\frac{S}{N} = \frac{sG\left(\sqrt{b_1} + \sqrt{b_2}\right)^2}{nG(b_1 + b_2)} = 2\,r_a\,\frac{s}{n}$$

Note that the location of the amplifiers does not affect the gain of a lossless antenna.

Passive Two-Beam Array (1)

Amplification after beamforming

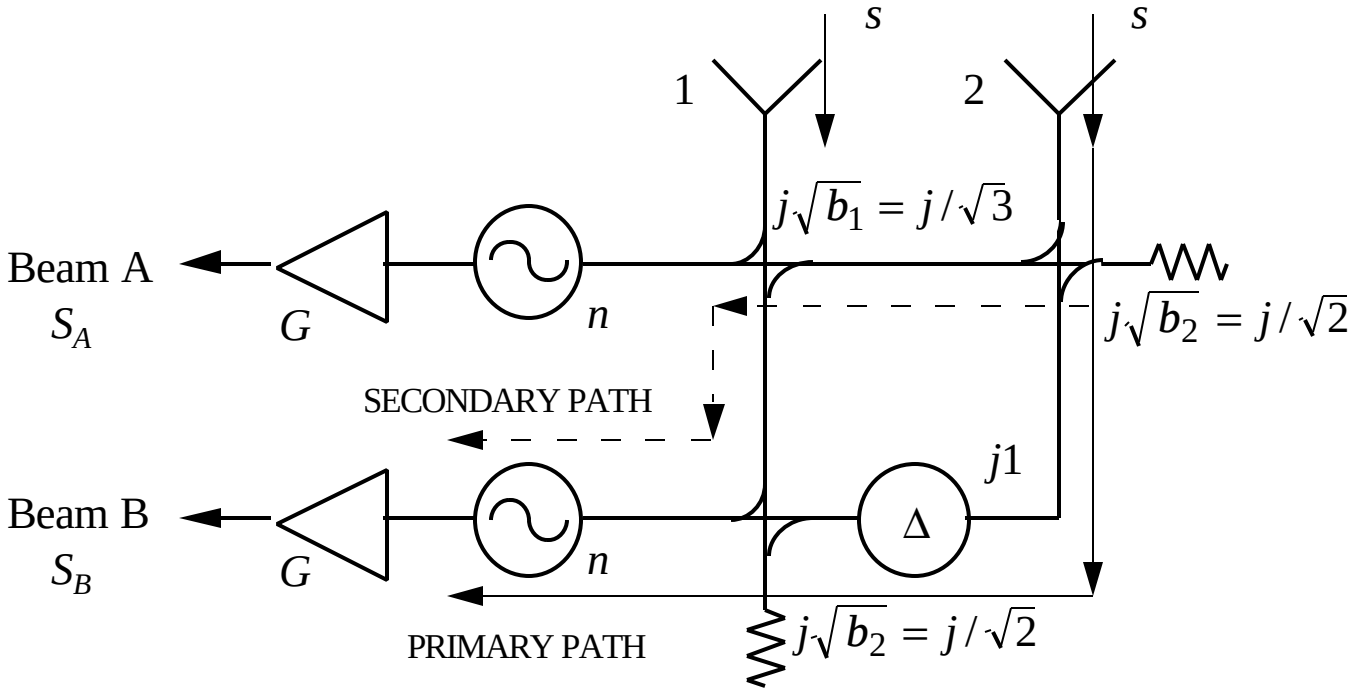

Coupling coefficients: $j\sqrt{b_1}$ and $j\sqrt{b_2}$

Transmission coefficients: t_1 and t_2

For uniform illumination:

Lossless couplers: $t_i + b_i = 1,\ i = 1, 2$

$$b_1 = 1/3,\ b_2 = 1/2,\ \Delta = \frac{e^{jp}}{\sqrt{3}}$$

Passive Two-Beam Array (2)

<u>Amplification after beamforming</u>:

For beam A: $S = sG\left(\sqrt{b_1} + \sqrt{b_2}\sqrt{t_1}\right)^2$ and $N = nG$. Using the coupling values on the last chart

$$\left(\frac{S}{N}\right)_A = 2\frac{s}{n} r_a \left(b_1 + b_2 t_1\right) = \frac{4}{3} r_a \frac{s}{n}$$

where the aperture efficiency for beam A is $r_a = \dfrac{\left(\sqrt{b_1} + \sqrt{b_2}\sqrt{t_1}\right)^2}{2(b_1 + b_2 t_1)} = \dfrac{(2A)^2}{2(2A)} = 1.$

A is the excitation amplitude (which is just a constant scale factor). For beam B the analysis is more complicated because there are two signal paths. The SNR is

$$\left(\frac{S}{N}\right)_B = \frac{s}{n} 2 r_a \left(b_2 t_1 + \left| t_2 \Delta - b_2 \sqrt{b_1} \right|^2 \right) = \frac{4}{3} r_a \frac{s}{n}$$

where the aperture efficiency for beam B is $r_a = \dfrac{\left(\sqrt{t_2} + \sqrt{b_2}\sqrt{t_1}\right)^2}{2\left(b_2 t_1 + \left| t_2 \Delta - b_2 \sqrt{b_1} \right|^2\right)} = 1.$ Note the factor of 4/3 in both cases. (The gain of a lossless antenna would have the factor 2.)

Active Two-Beam Array (1)

$$\left(\frac{S}{N}\right)_A = \left(\frac{S}{N}\right)_B = 2r_a\frac{s}{n}$$

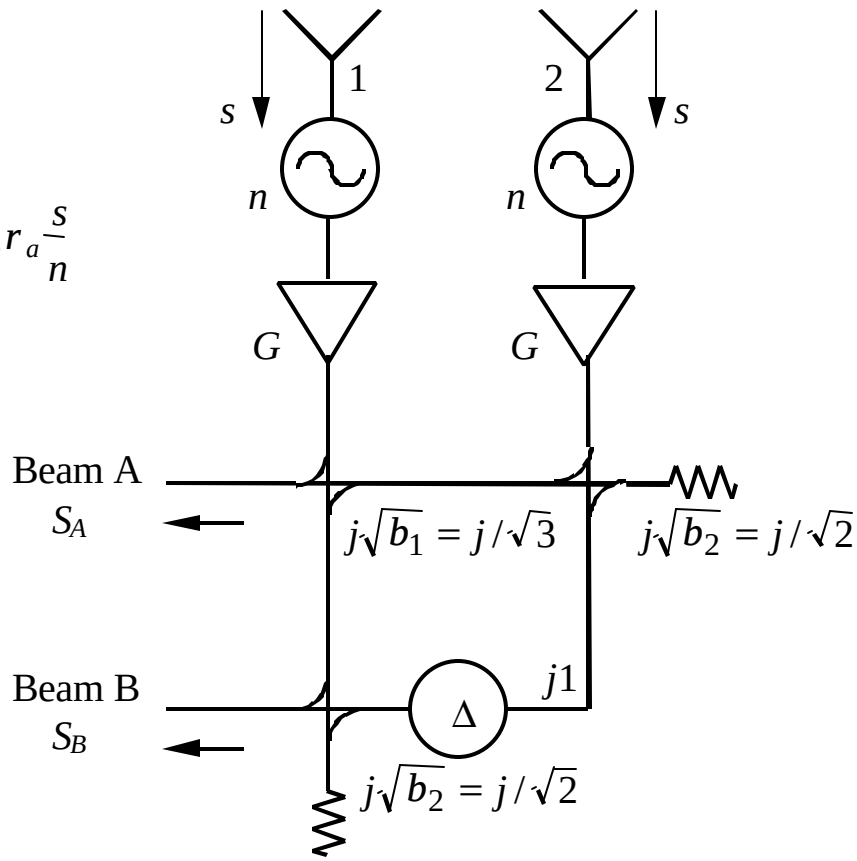

Active Two-Beam Array (2)

<u>Amplification before beamforming</u>:

For beam A: $S = sG\left(\sqrt{b_1} + \sqrt{b_2}\sqrt{t_1}\right)^2$ and $N = nG(b_1 + b_2 t_1)$ which gives

$$\left(\frac{S}{N}\right)_A = 2\,r_a\,\frac{s}{n}$$

where, as before, the aperture efficiency for beam A is $r_a = 1$.

For beam B: $N = nG(b_2 t_1 + b_1 b_2^2 + t_2^2) = 2nG/3$ and with some work it is found that $S = sG\,4b_2 t_1$. The corresponding SNR is

$$\left(\frac{S}{N}\right)_B = 2\,r_a\,\frac{s}{n}$$

where the aperture efficiency for beam B is also $r_a = 1$. Note that the factor of 2 is the same as for a lossless antenna. The signal levels are the same for amplification before and after beamforming. It is only the noise level that has changed.

Comparison of SNR: Active vs. Passive

PASSIVE (Amplification after beamforming): The antenna gain is the SNR improvement (neglecting noise introduced by the antenna).

ACTIVE (Amplification before beamforming):

1. The SNR performance can be significantly better than the gain indicates.
2. Beam coupling losses can be recovered.
3. SNR degradation is only determined by the aperture efficiency. All other losses are recovered.
4. The coupler match looking into the sidearms does not affect the SNR.

Example

Consider the receiver channel shown below:

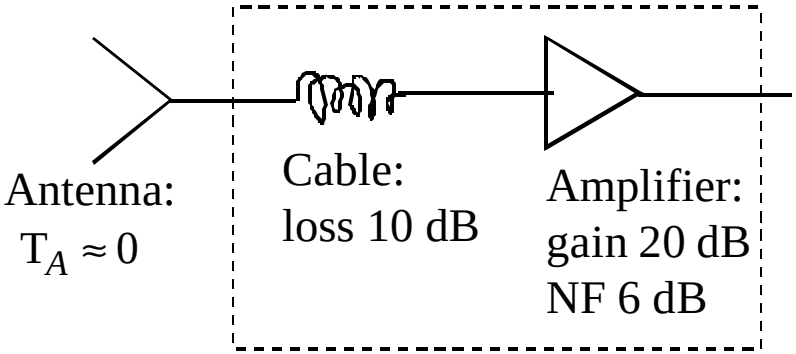

The effective noise temperature of the dashed box is

$$F_e = F_1 + \frac{F_2 - 1}{A_1} = L_x + \frac{\mathrm{NF} - 1}{1/L_x} = 10 + \frac{4-1}{0.1} = 40 \quad \rightarrow \quad 16\,\mathrm{dB}$$

A low noise amplifier has a noise figure near one. If we use a LNA that has a NF of 1.5 dB

$$F_e = 10 + \frac{1.4-1}{0.1} = 14 \quad \rightarrow \quad 11.5\,\mathrm{dB}$$

However, if we use a LNA before the cable

$$F_e = 1.4 + \frac{10-1}{100} = 1.49 \quad \rightarrow \quad 1.73\,\mathrm{dB}$$

Losses "behind" the amplifier can be recovered. <u>Use a LNA and place it as close to the antenna as possible</u>. Antennas that incorporate amplifiers are called <u>active antennas</u>.

Active Array Radar Transmit/Receive Module

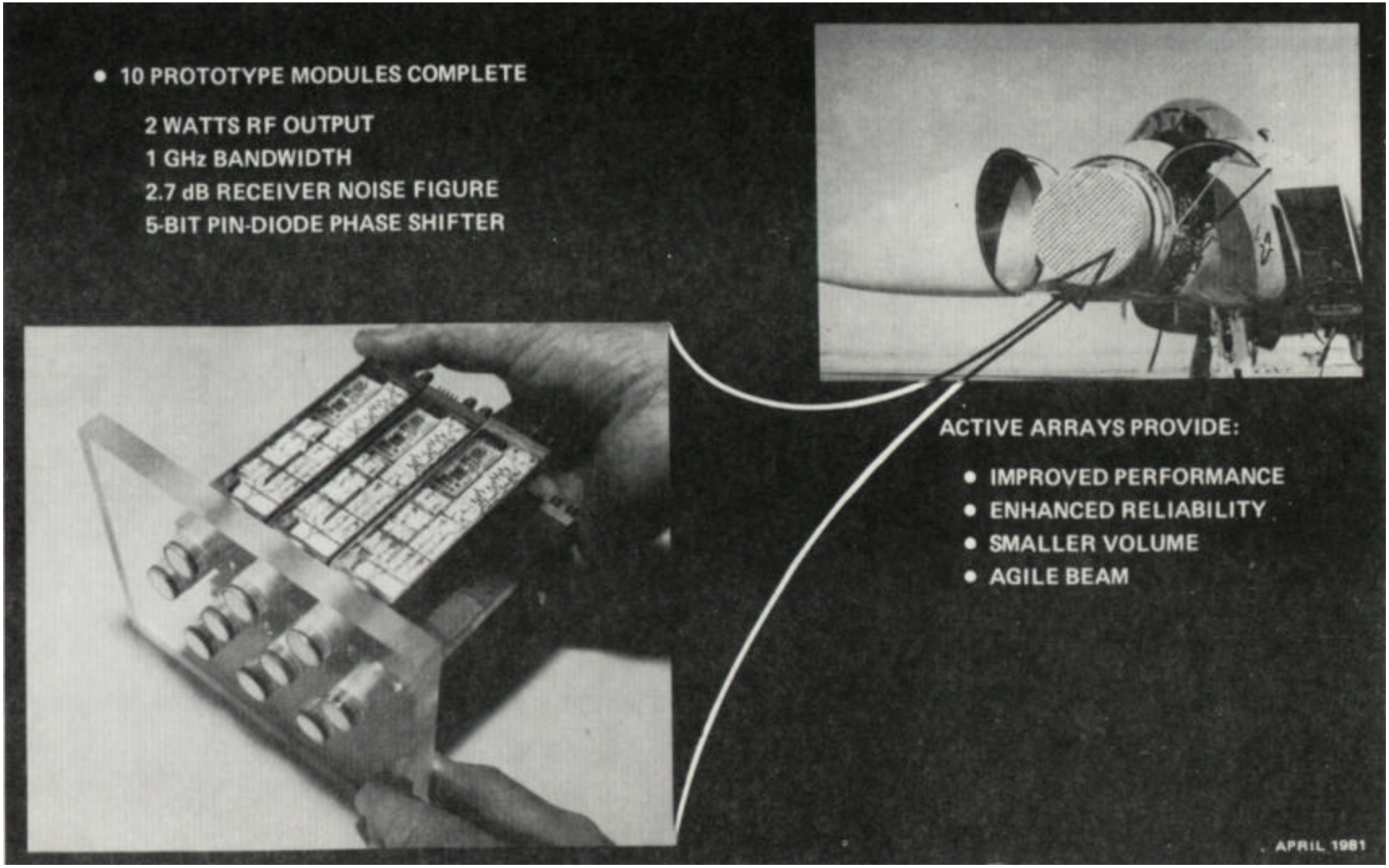

Digital Phase Shifters

Phase shifters are used to "tilt" the phase across the array aperture for scanning. Diode phase shifters are only capable of providing discrete phase intervals. A n bit phase shifter has 2^n phase states. The quantization levels are separated by $\Delta f = 360^\circ / 2^n$. The fact that the exact phase cannot always be obtained results in:

1. gain loss
2. increase in sidelobe level
3. beam pointing error

Example of phase truncation:

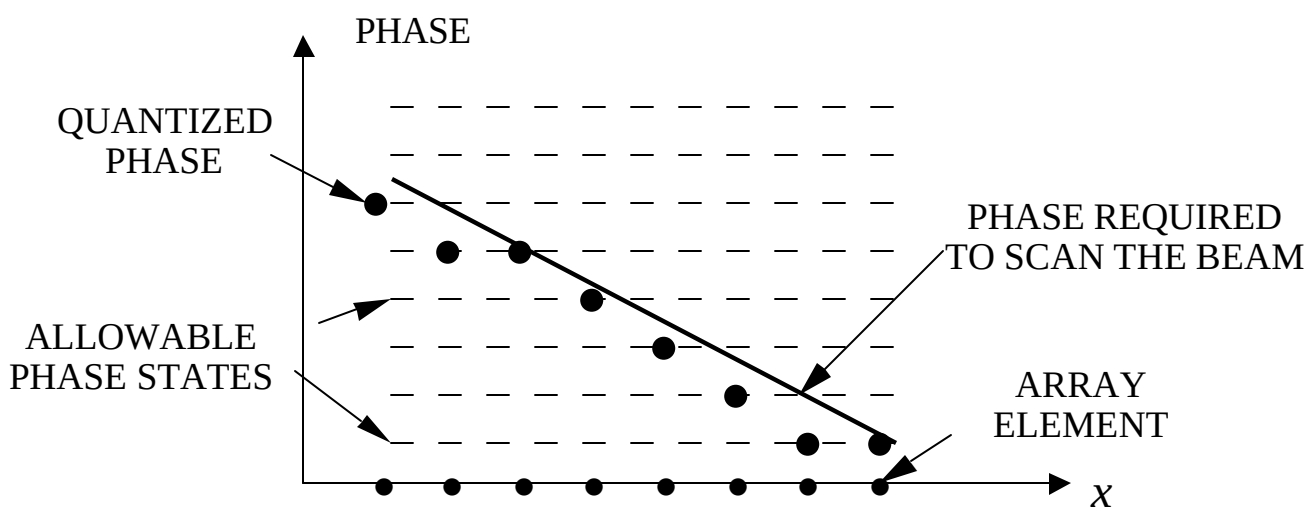

Effect of Phase Shifter Roundoff Errors

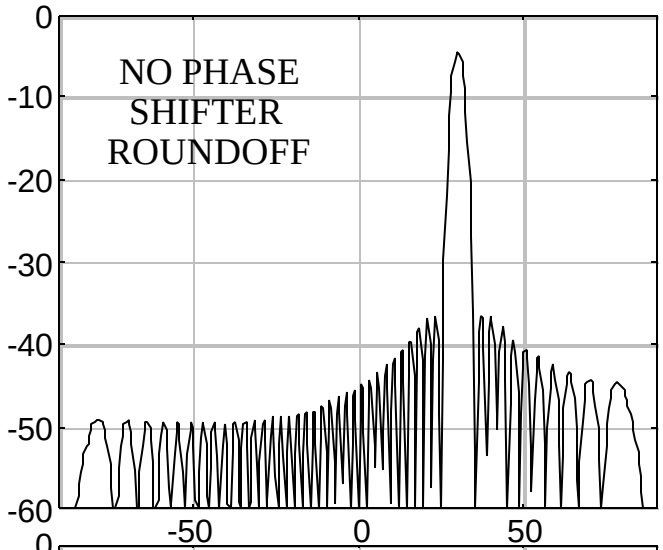

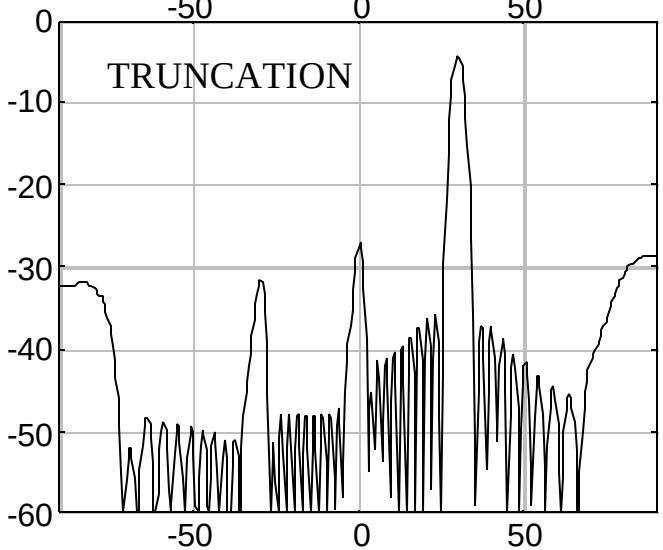

Truncation causes beam pointing errors. Random roundoff methods destroy the periodicity of the quantization errors. The resultant rms error is smaller than the maximum error using truncation.

Linear array, 60 elements, $d = 0.4\lambda$
4 bit phase shifters

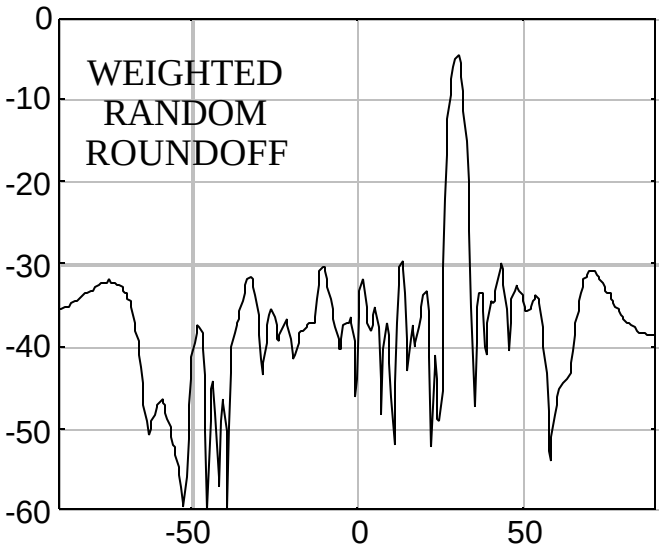

Digital Phase Shifter

- X-band 5-bit PIN diode phase shifter

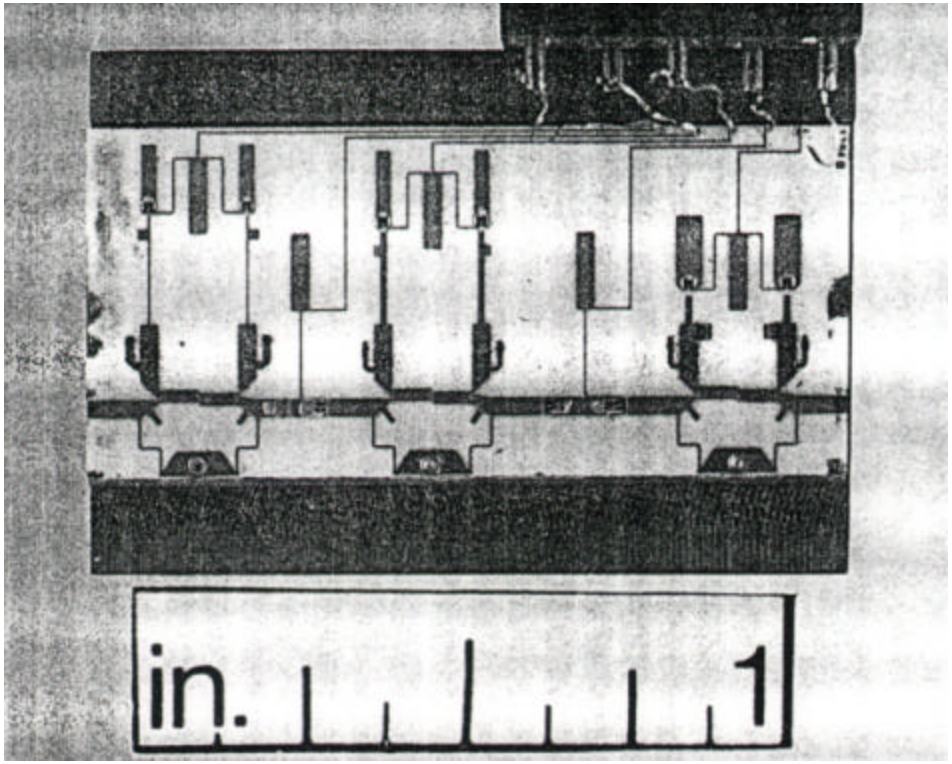

From Hughes Aircraft Co.

True Time Delay Scanning

Array factor for an array with the beam scanned to angle q_s:

$$\mathrm{AF}(q) = \sum_{n=1}^{N} A_n e^{j(n-1)kd(\sin q - \sin q_s)} = \sum_{n=1}^{N} A_n e^{j(n-1)(y - y_s)}$$

where $y_s = kd \sin q_s$. For a uniformly excited array ($A_n = 1$)

$$|\mathrm{AF}(q)| = \left| \frac{\sin\left(\frac{Nkd}{2}(\sin q - \sin q_s)\right)}{\sin\left(\frac{kd}{2}(\sin q - \sin q_s)\right)} \right| = \left| \frac{\sin\left(N(y - y_s)/2\right)}{\sin\left((y - y_s)/2\right)} \right|$$

$$y\big|_{q=q_s} - y_s = 0$$

$$\frac{2pd}{l} \sin q_s - y_s = 0$$

$$y_s = \frac{2pd}{l} \sin q_s$$

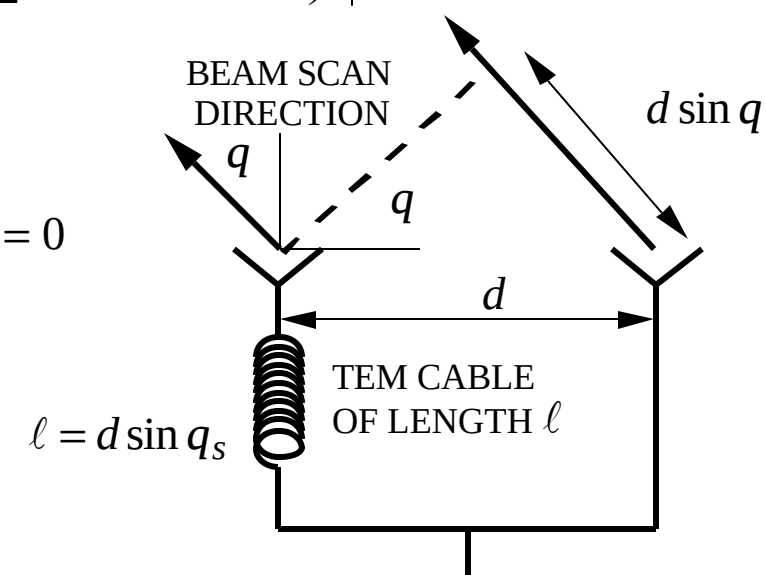

Time Delay vs. Fixed Phase Scanning

BEAM SCANNING USING CABLES
TO PROVIDE "TRUE TIME DELAY"

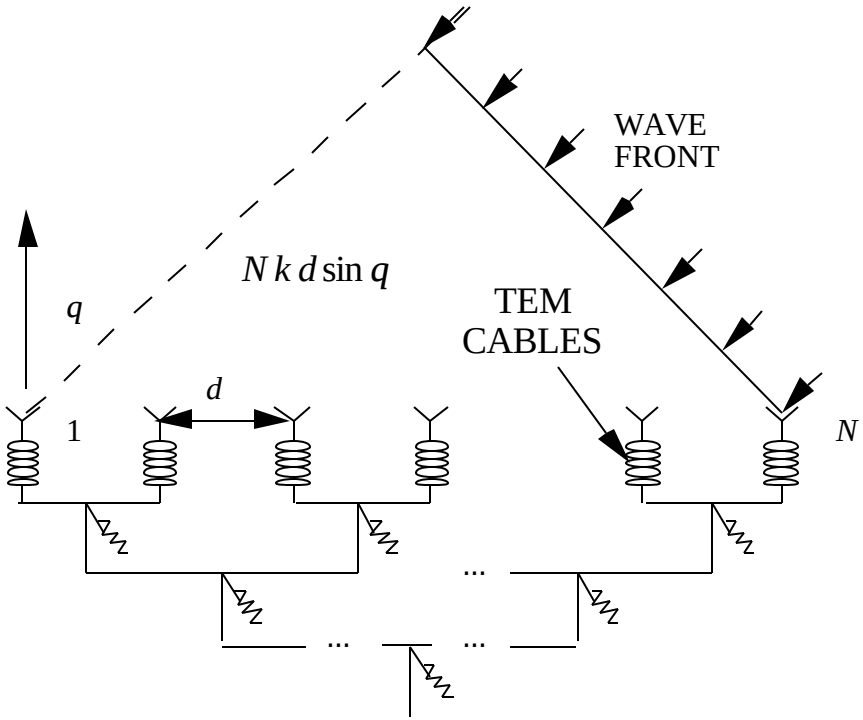

BEAM SCANNING WITH PHASE
SHIFTERS GIVES A PHASE THAT
IS CONSTANT WITH FREQUENCY

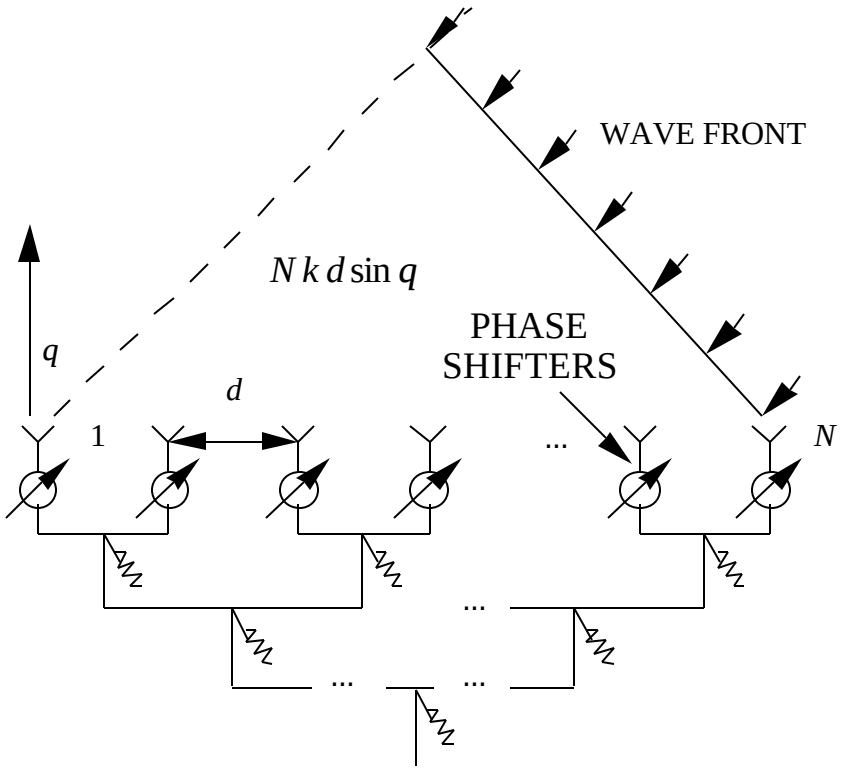

Beam Squint Due to Frequency Change

Phase shifters provide a phase that is approximately constant with frequency

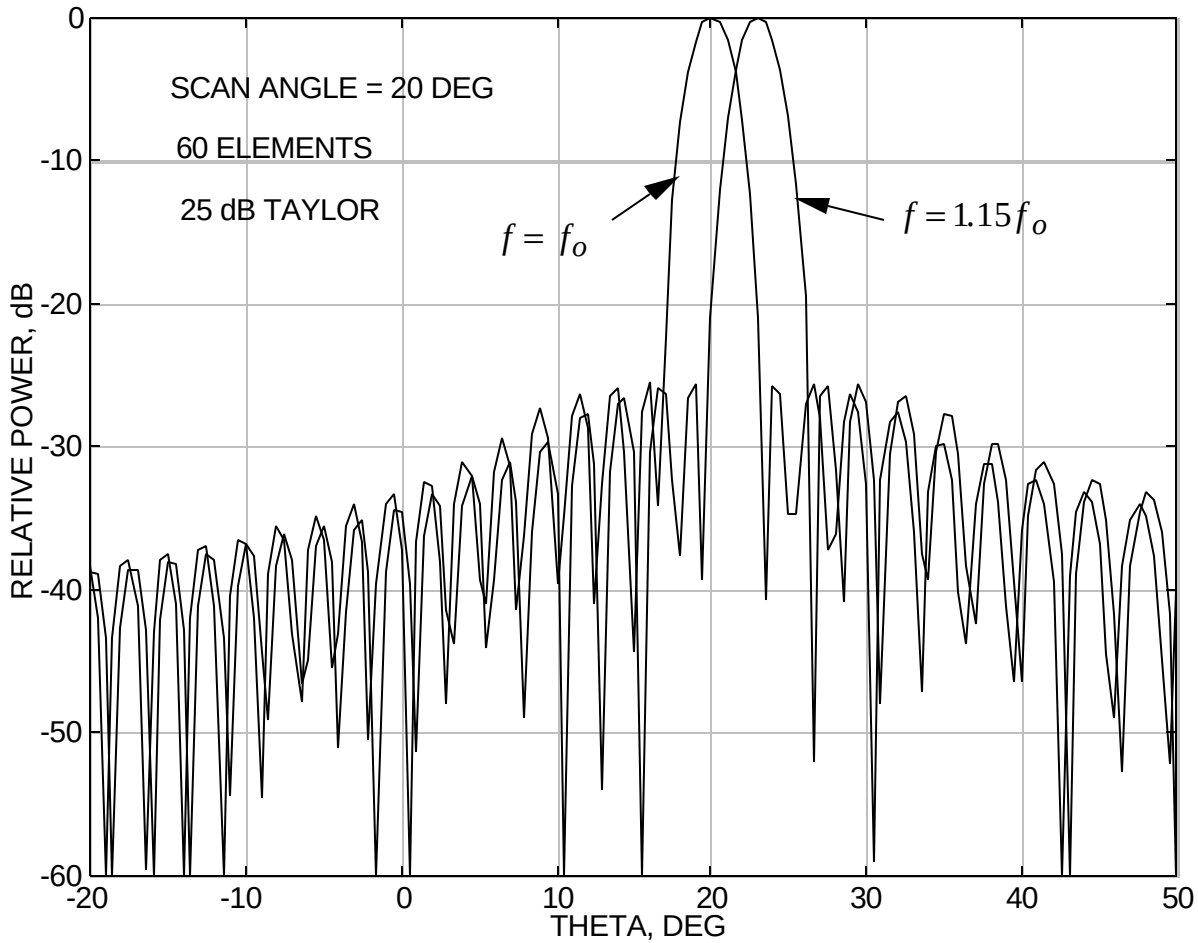

Time Delay Networks

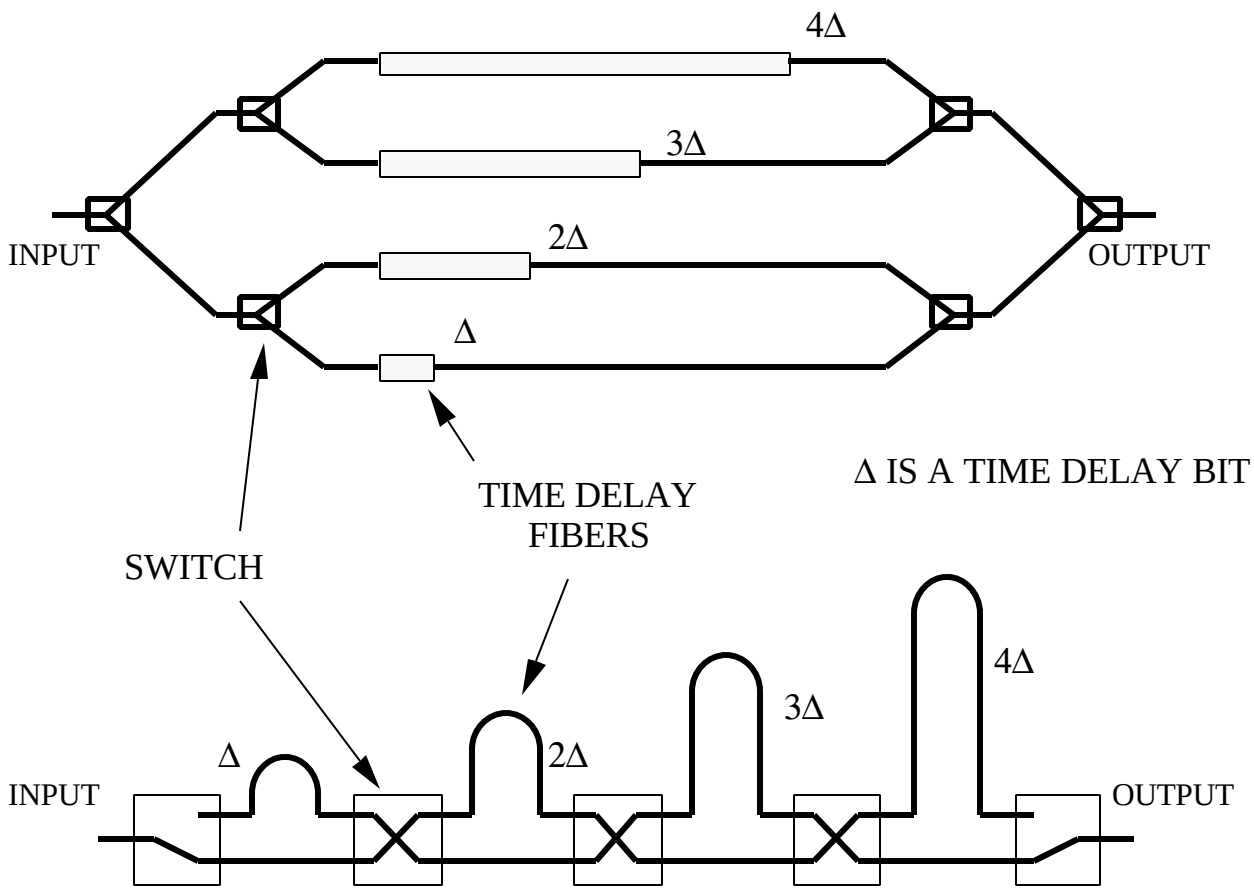

Time Delay Using Fiber Optics

Large phase shifts (electrical lengths) can be obtained with fibers

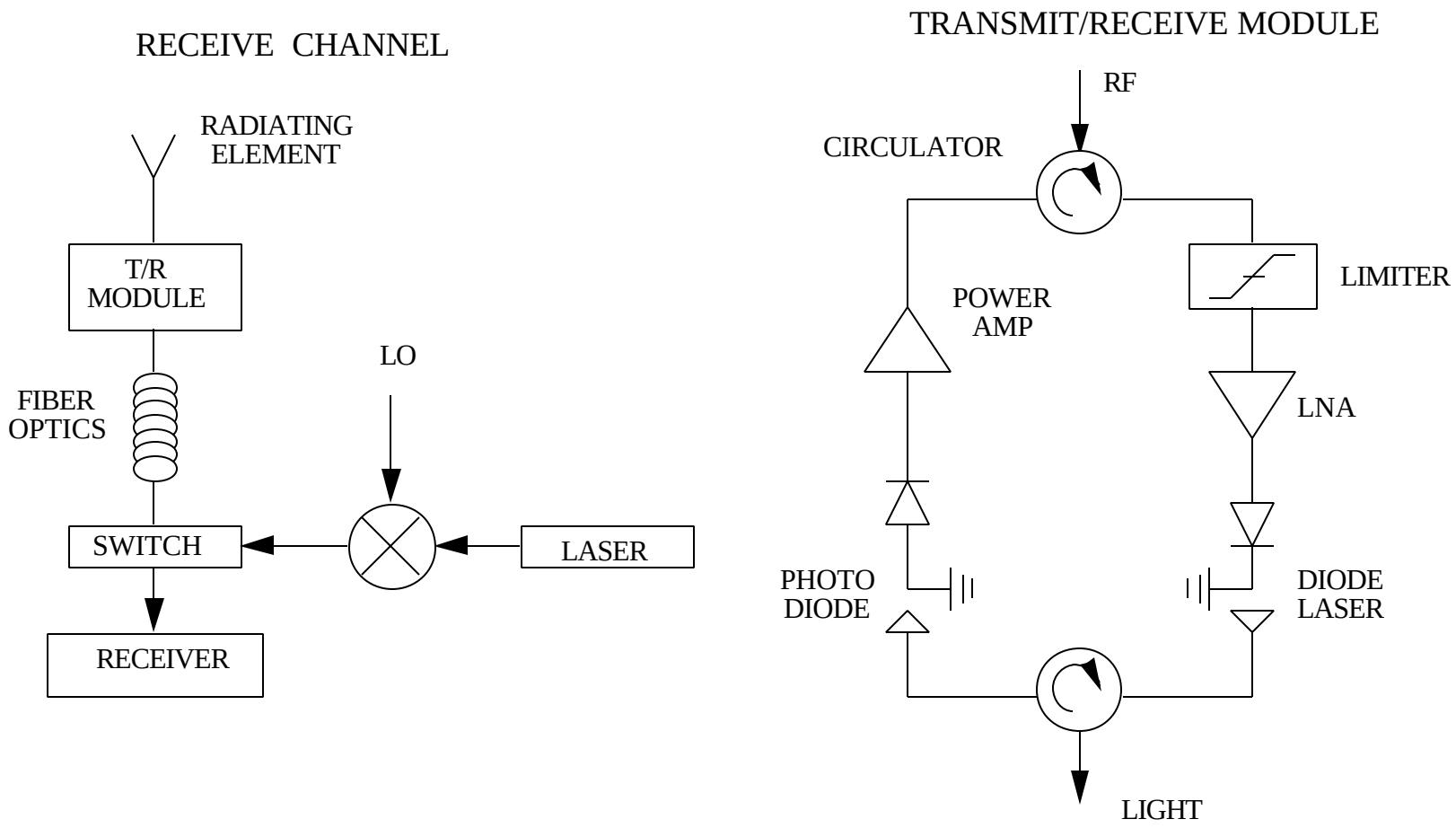

Digital Beamforming (1)

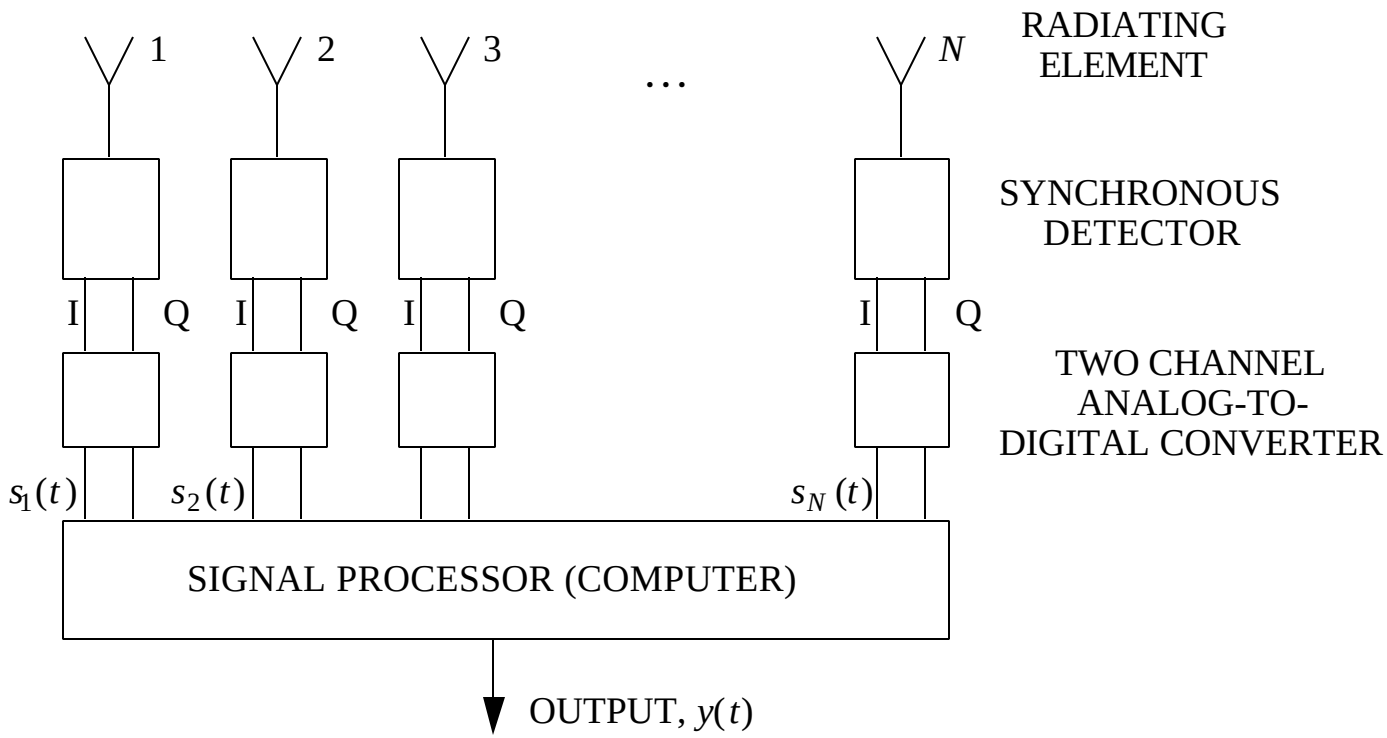

Assuming a narrowband signal, $y(t) = \sum_{n=1}^{N} w_n s_n(t)$. The complex signal (I and Q, or equivalently, amplitude and phase) are measured and fed to the computer. Element responses become array storage locations in the computer. The weights are added and the sums computed to find the array response. In principle any desired beam characteristic can be achieved, including multiple beams.

Digital Beamforming (2)

Implementation of digital beamforming using I and Q channels:

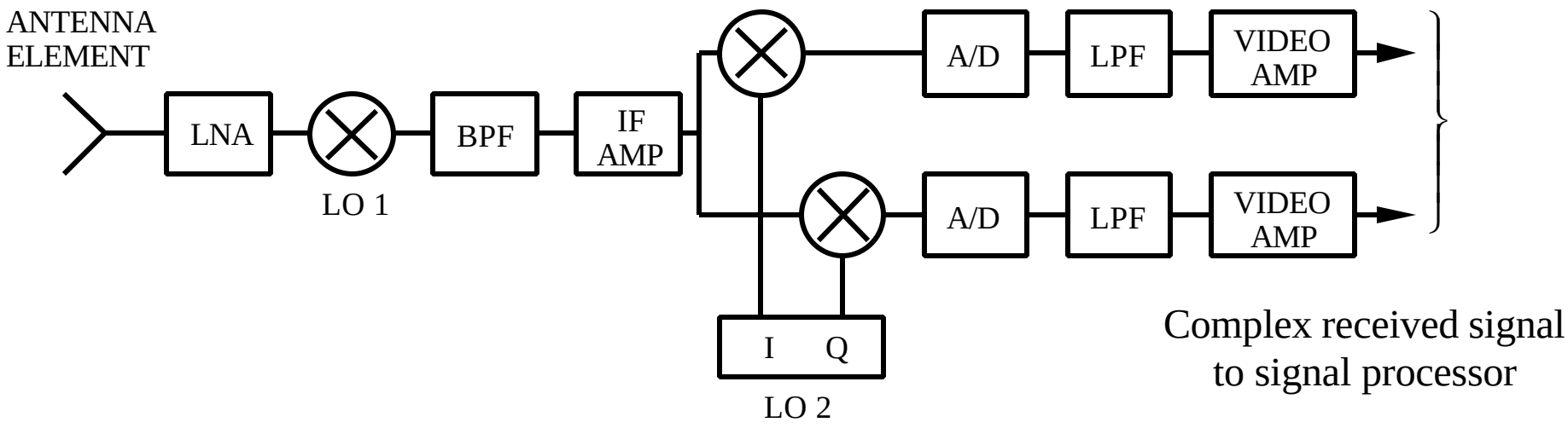

Monopulse Difference Beams

Example of a low sidelobe difference beam obtained using a Bayliss amplitude distribution

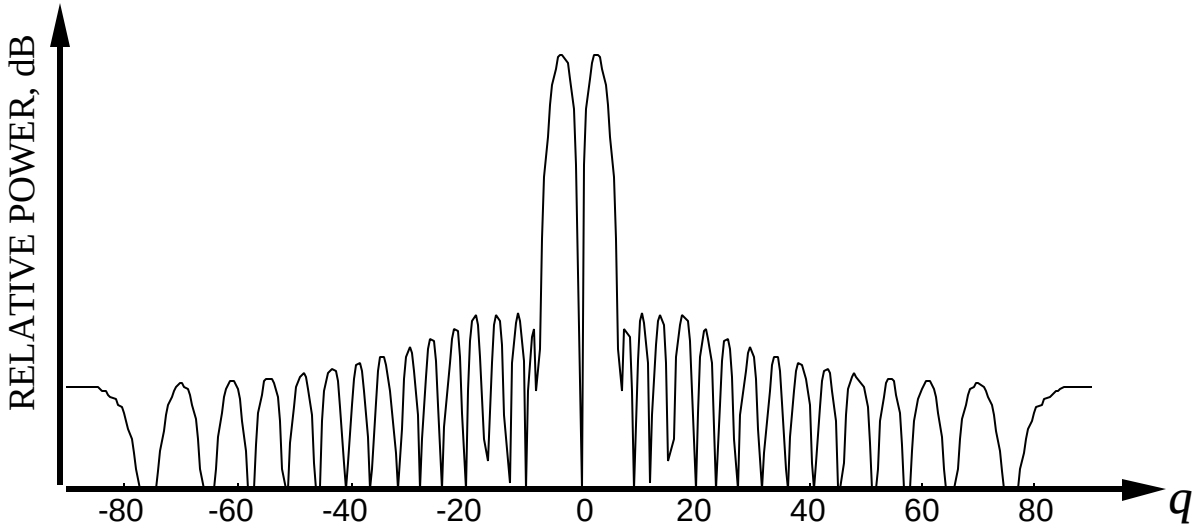

Formation of difference beams by subtraction of two subarrays

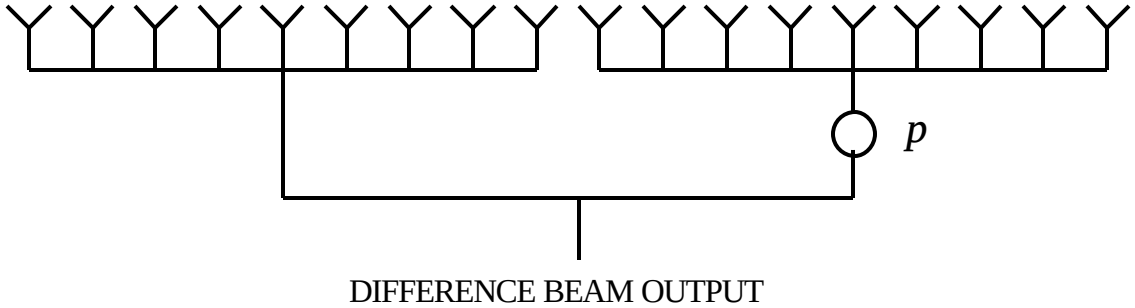

Sum and Difference Beamforming

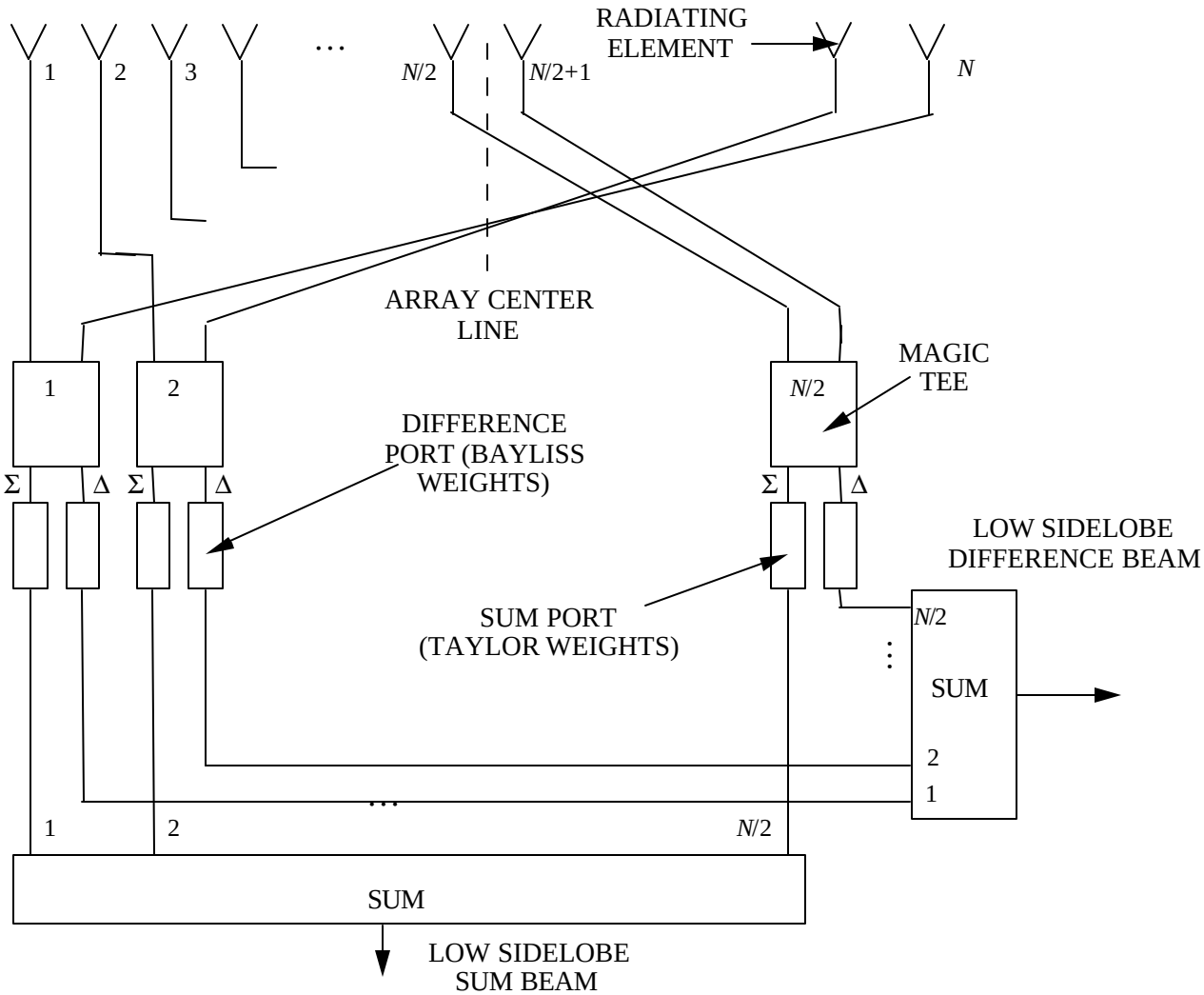

Waveguide Monopulse Beamforming Network

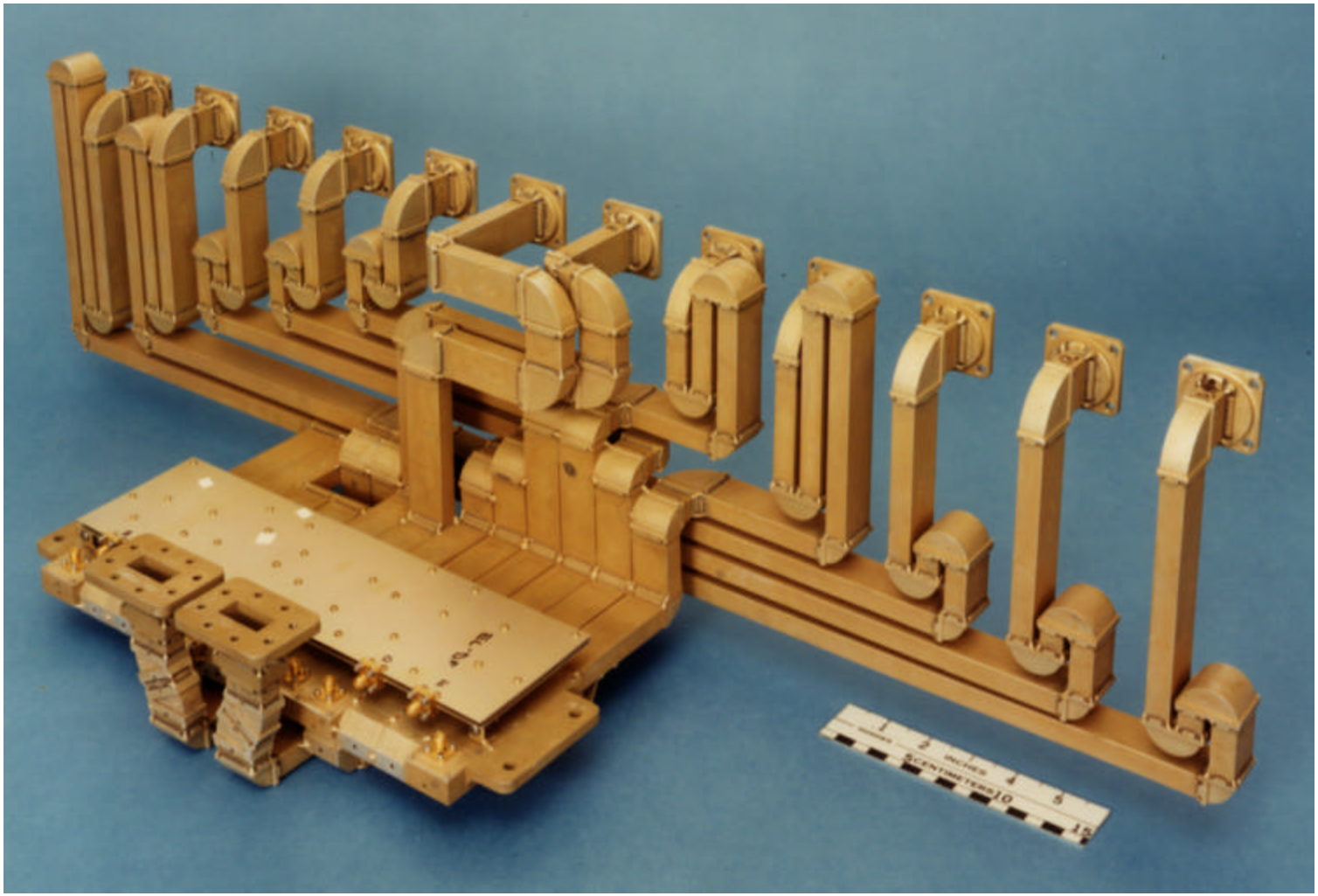

Antenna Radomes

The purpose of a radome (from radar dome) is to protect the antenna from the harsh operational environment (aerodynamic and thermal stresses, weather, etc.). At the same time it must be electromagnetically transparent at the operating frequency of the radar. The antenna pattern with a radome will always be different than that without a radome. Undesirable effects include:

1. gain loss due to lossy radome material and multiple reflections
2. beam pointing error from refraction by the radome wall
3. increased sidelobe level from multiple reflections

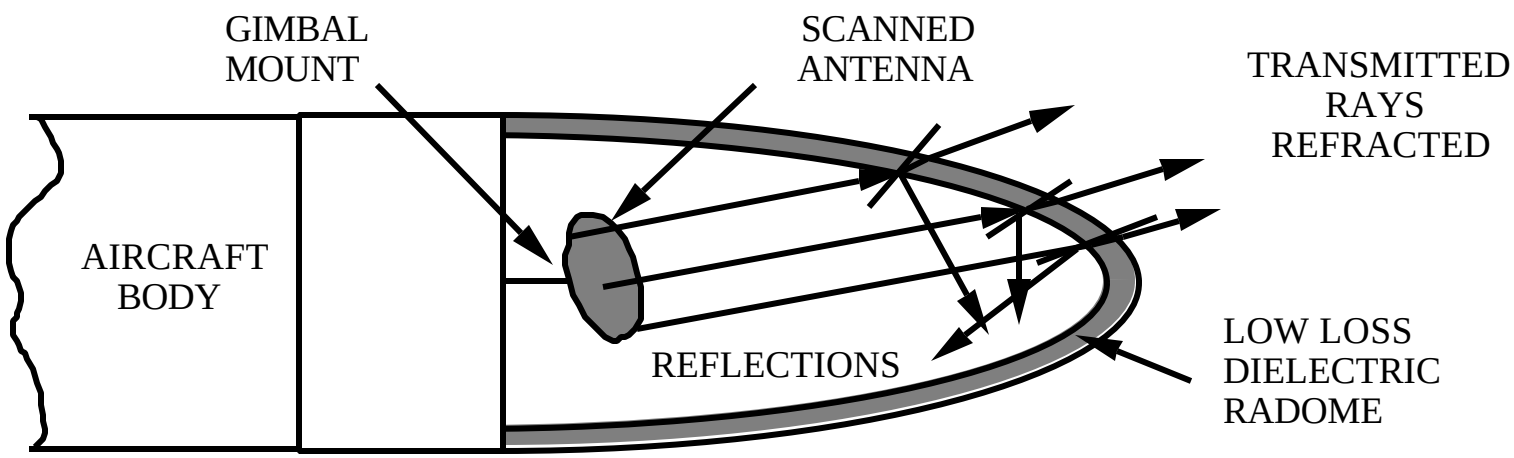

These effects range from small for flat non-scanning antennas with flat radomes to severe for scanning antennas behind doubly curved radomes.

Conformal Antennas & "Smart Skins"

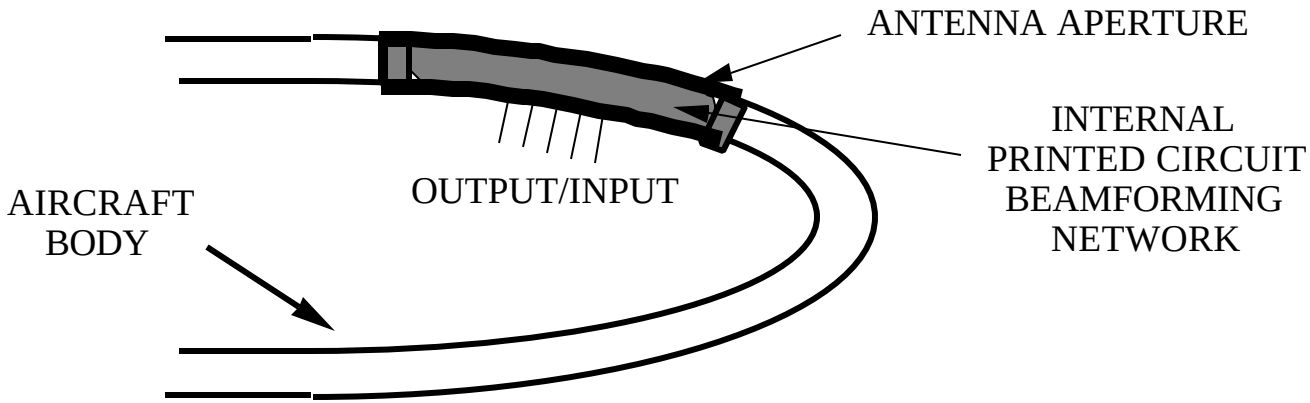

1. Conformal antenna apertures conform to the shape of the platform.
2. Typically applied to composite surfaces; the antenna beamforming network and circuitry are interlaced with the platform structure and skin
3. Can be active antennas with processing embedded (i.e., adaptive)
4. Self-calibrating and fault isolation (i.e., identification of failures can be incorporated (this function is referred to as build in test equipment, BITE)
5. Can be reconfigurable (portion of the aperture that is active can be changed)
6. Infrared (IR) and other sensors can be integrated into the antenna

Testing of Charred Space Shuttle Tile

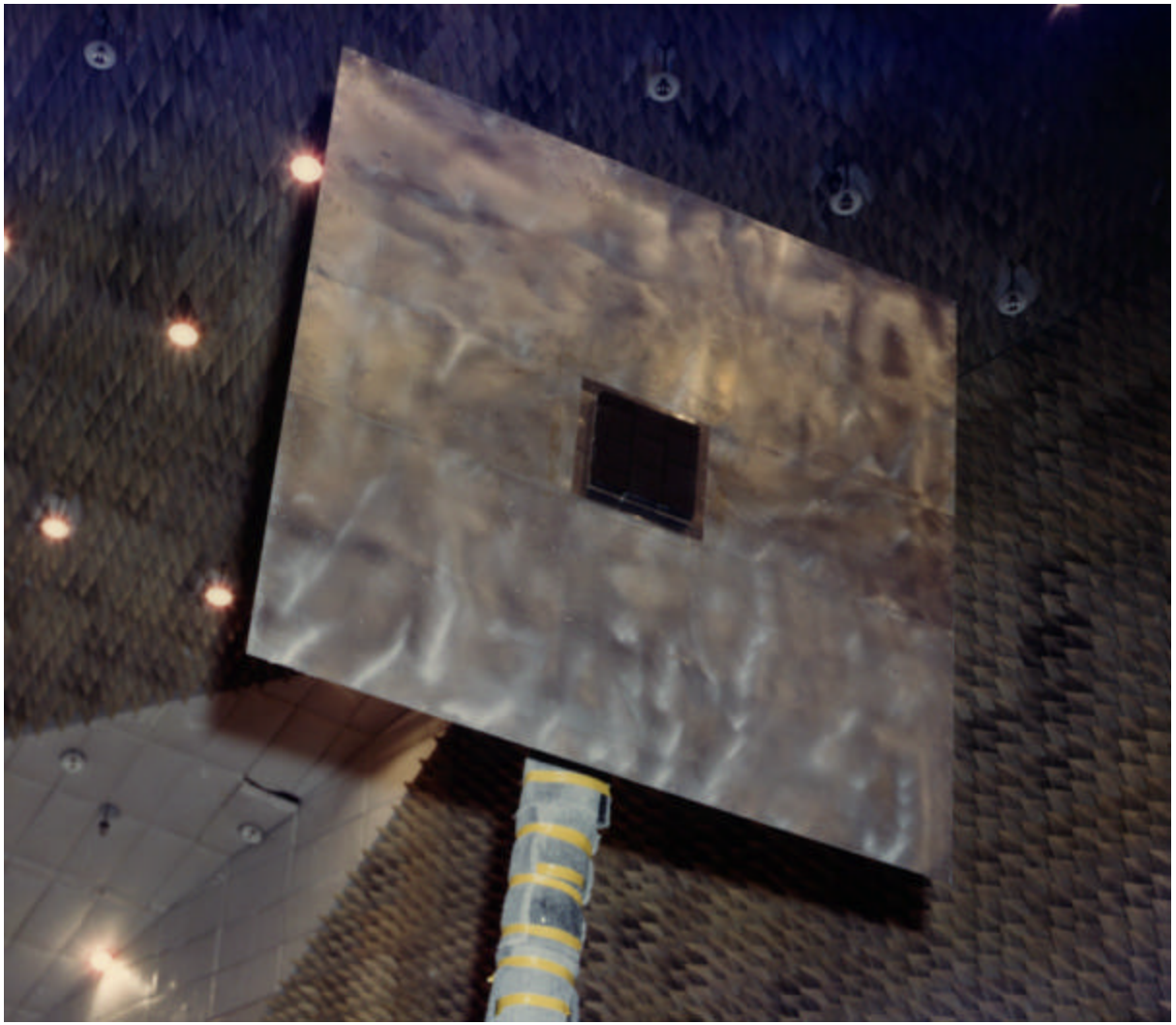

Antenna Imperfections (Errors)

Causes:

1. Manufacturing and assembly tolerances
   a) machining of parts
   b) alignment and assembly
   c) material electrical properties
   d) thermal expansion and contraction
   e) gravitational deformation
2. Failures

Effects:

1. Reduced gain
2. Increased sidelobe level
3. Reduced power handling capability

For an array of N elements:

$$G \approx \frac{4pA_e}{l^2}\left(P_{\text{norm}}(1-\overline{\Delta^2}) + \frac{\overline{\Delta^2}}{Nr_a} \right)$$

where $P_{\text{norm}} = \dfrac{|\vec{E}|^2}{|\vec{E}_{\max}|^2} =$ normalized error free power pattern

r_a = aperture efficiency

$\overline{\Delta^2}$ = variance of errors (assumed to be small)

Smart Antennas (1)

Antennas with built-in multi-function capabilities are often called smart antennas. If they are conformal as well, they are known as smart skins. Functions include:

- Self calibrating: adjust for changes in the physical environment (i.e., temperature).
- Self-diagnostic (built-in test, BIT): sense when and where faults or failures have occurred.

Tests can be run continuously (time scheduled with other radar functions) or run periodically. If problems are diagnosed, actions include:

- Limit operation or shutdown the system
- Adapt to new conditions/reconfigurable

Example: a test signal is used to isolate faulty dipoles and transmission lines

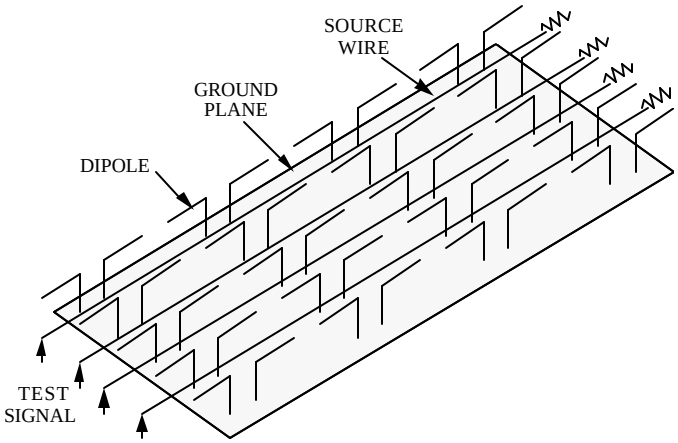

Smart Antennas (2)

Example of a self-calibrating, self-diagnostic transmit/receive module

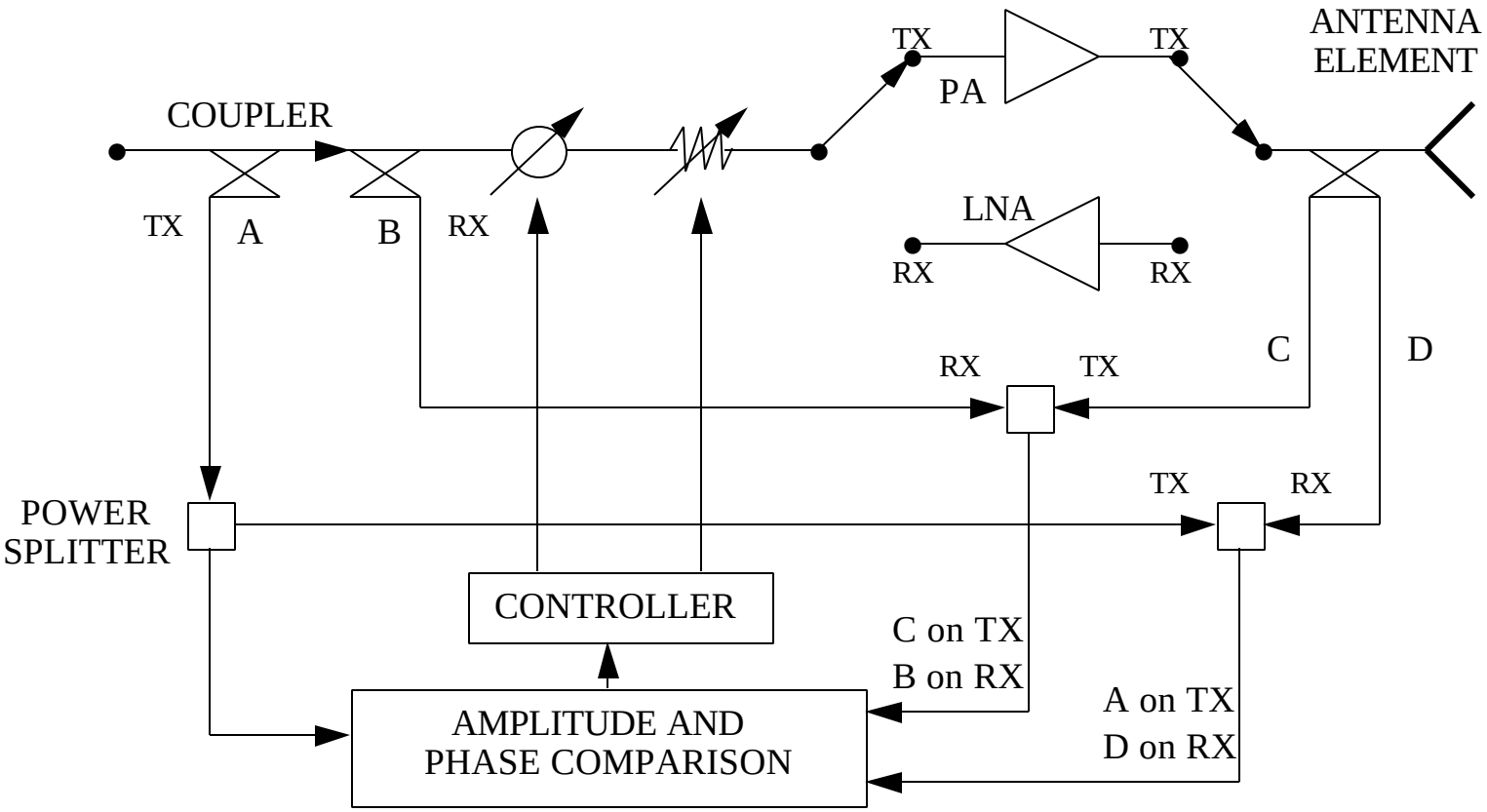

Microwave Devices

Passive:

- Transmission lines
- Switches
- Magic tees
- Rotary joints
- Circulators
- Filters

Active:

- Tubes
- Solid state amplifiers
- Mixers

Transmission Line Refresher (1)

Finite length loaded transmission line:

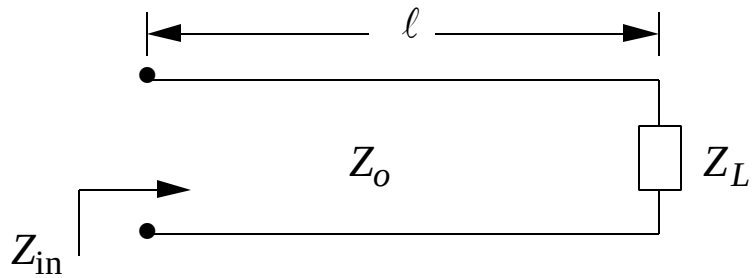

Z_o = characteristic impedance; depends on line geometry and material and wavelength m, e, l, and s; real for lossless lines; approximately real for low-loss lines

Z_L = load impedance; generally complex

Z_{in} = input impedance

$$Z_{\text{in}} = Z_o \frac{Z_L + Z_o \tanh(g\ell)}{Z_o + Z_L \tanh(g\ell)}$$

$g = a + jb$ = propagation constant (depends on line geometry and material and frequency)

For a lossless line $a = 0$ (and low loss line $a \approx 0$):

$$Z_{\text{in}} \approx Z_o \frac{Z_L + jZ_o \tan(b\ell)}{Z_o + jZ_L \tan(b\ell)}$$

Transmission Line Refresher (2)

Reflection coefficient of a load or junction:

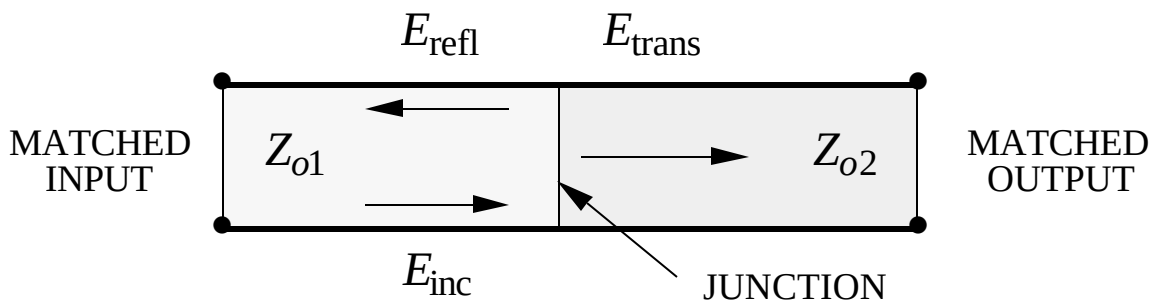

$Z_{o1} =$ characteristic impedance of transmission line 1
$Z_{o2} =$ characteristic impedance of transmission line 1
$E_{\text{inc}} =$ incident electric field; $E_{\text{refl}} =$ reflected electric field; $E_{\text{trans}} =$ transmitted electric field

Reflection coefficient of the junction: $\Gamma = \dfrac{|E_{\text{refl}}|}{|E_{\text{inc}}|} = \dfrac{Z_{o2} - Z_{o1}}{Z_{o2} + Z_{o1}}$

<u>Voltage standing wave ratio</u> (VSWR): $s = \dfrac{|E_{\max}|}{|E_{\min}|} = \dfrac{1+|\Gamma|}{1-|\Gamma|} \quad (1 \le s < \infty)$

<u>Return loss</u>: $\text{RL} = -20\log(|\Gamma|)$ dB

Transmission Line Refresher (3)

Matching and tuning transmission line circuits:

Mismatches cause reflections, but multiple mismatches can be "tuned" by forcing the reflections to cancel (add destructively). This approach is generally narrow-band because most load impedances are a strong function of frequency.

"Off-the-shelf" hardware is usually designed to have a characteristic impedance of 50 Ω ($Z_o = 50 + j0\ \Omega$). Therefore, when devices are combined, reflections will be small and the input impedance of a chain of devices independent of line lengths. For example, if $Z_L = Z_o$:

$$Z_{\text{in}} = Z_o \frac{Z_o + jZ_o \tan(b\ell)}{Z_o + jZ_o \tan(b\ell)} \rightarrow Z_o$$

Devices such as antennas and amplifiers have matching networks added to the input and output ports to provide a 50 Ω impedance.

Matching elements include:
- quarter-wave steps
- transmission line stubs
- lumped elements (resistors, capacitors and inductors)

Multiplexers

Multiplexers are frequency selective circuits used to separate signals by frequency spectrum. They are comprised of filter networks. An example is a waveguide manifold multiplexer:

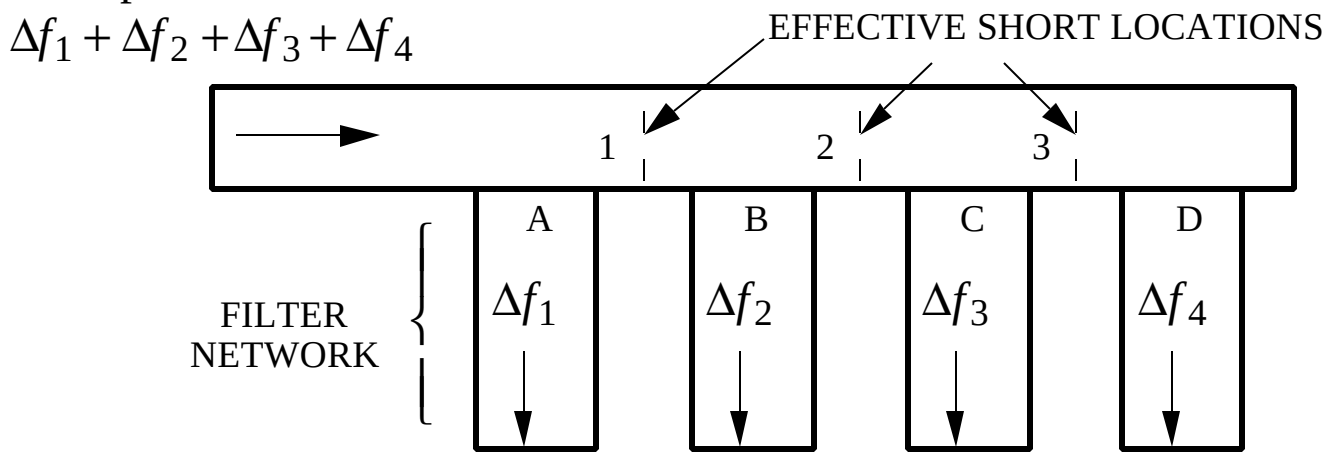

The plane at 1 appears as a short in the band Δf_1, but matched at other frequencies. The waveguide junction at A appears matched at Δf_1, but shorted at other frequencies. Similarly for planes 2, 3, 4 and junctions B, C, D. Frequency characteristic:

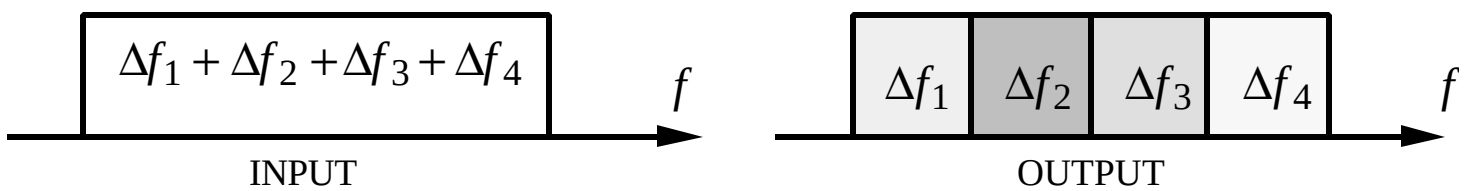

Rotary Joints

Microwave rotary joints allow the antenna to rotate without twisting the transmission line that feeds the antenna. Example of a coaxial rotary joint:

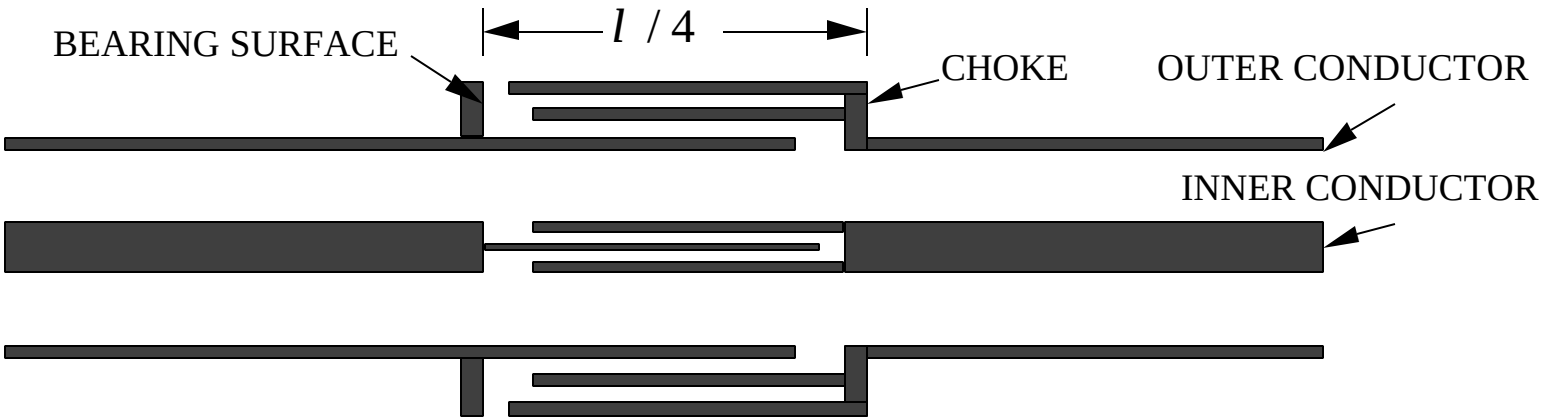

There is no efficient, reliable rotary joint in rectangular waveguide. Therefore, most rotary joints are made with circular waveguide because of the simple construction. Thus transitions from rectangular to circular cross sections are required.

Multichannel rotary joints are also possible for monopulse sum and difference channels.

Microwave Switches

Microwave switches are used to control signal transmission between circuit devices. A general representation of a switch is given in terms of "poles" and "throws"

SINGLE POLE - DOUBLE THROW (SPDT)

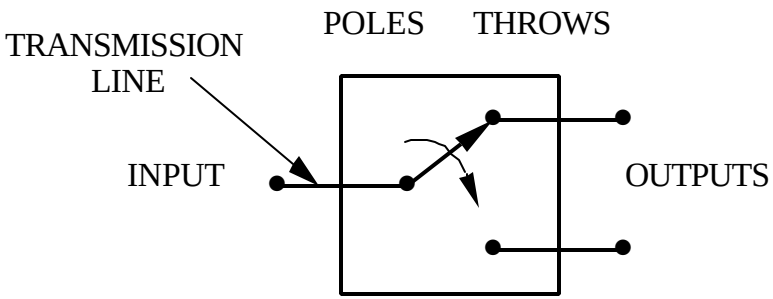

DOUBLE POLE - DOUBLE THROW (DPDT)

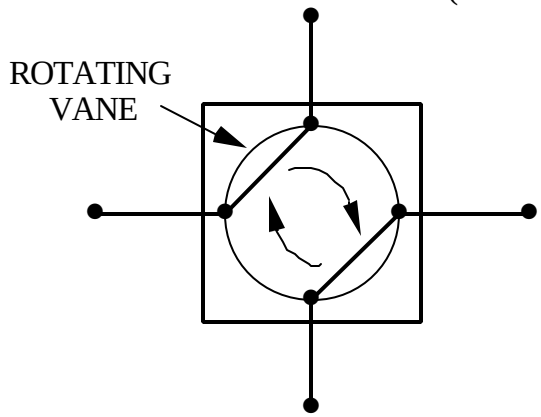

Switches can be constructed in any type of transmission line or waveguide. Common types:

Type	Principle	Applied to:
Mechanical	Rotating or moving parts	All types
Diode	Forward/backward bias yields low/high impedance	Stripline, microstrip, waveguide
Gas discharge	Confined gas is ionized	Waveguide
Circulator	Magnetized ferrite switches circulation direction	Stripline, microstrip, waveguide

Circulators

Circulators "circulate" the signal from port to port in the direction indicated by the arrow

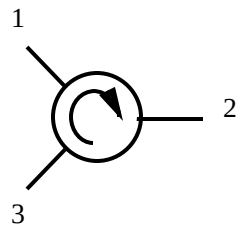

Ideally:

Signal into port 1 emerges out port 2; signal out port 3 is zero.
Signal into port 2 emerges out port 3; signal out port 1 is zero.
Signal into port 3 emerges out port 1; signal out port 2 is zero.

In practice:

1. There is some insertion loss in the forward (arrow) direction. Values depend on the type of circulator. They range from 0.5 dB to several dB.
2. There is leakage in the reverse (opposite arrow) direction. Typical values of <u>isolation</u> are 20 to 60 dB. That is, the <u>leakage signal</u> is 20 to 60 dB below the signal in the forward direction.
3. Increasing the isolation comes at the expense of size and weight

Uses: 1. Allow a transmitter and receiver to share a common antenna without switching
2. Attenuate reflected signals (load the third port)

Waveguide Magic Tee

Ports 1 and 2 are the "sidearms." Port 4 is the "sum" port and 3 the "difference" port.

Sidearm excitation	Port 3	Port 4
$A_1 = ae^{jf}$, $A_2 = ae^{jf}$	$A_3 = 0$	$A_4 = 2a$
$A_1 = ae^{jf}$, $A_2 = ae^{jf+p}$	$A_3 = 2a$	$A_4 = 0$

"Magic" originates from the fact that it is the only 4-port device that can be simultaneously matched at all ports.

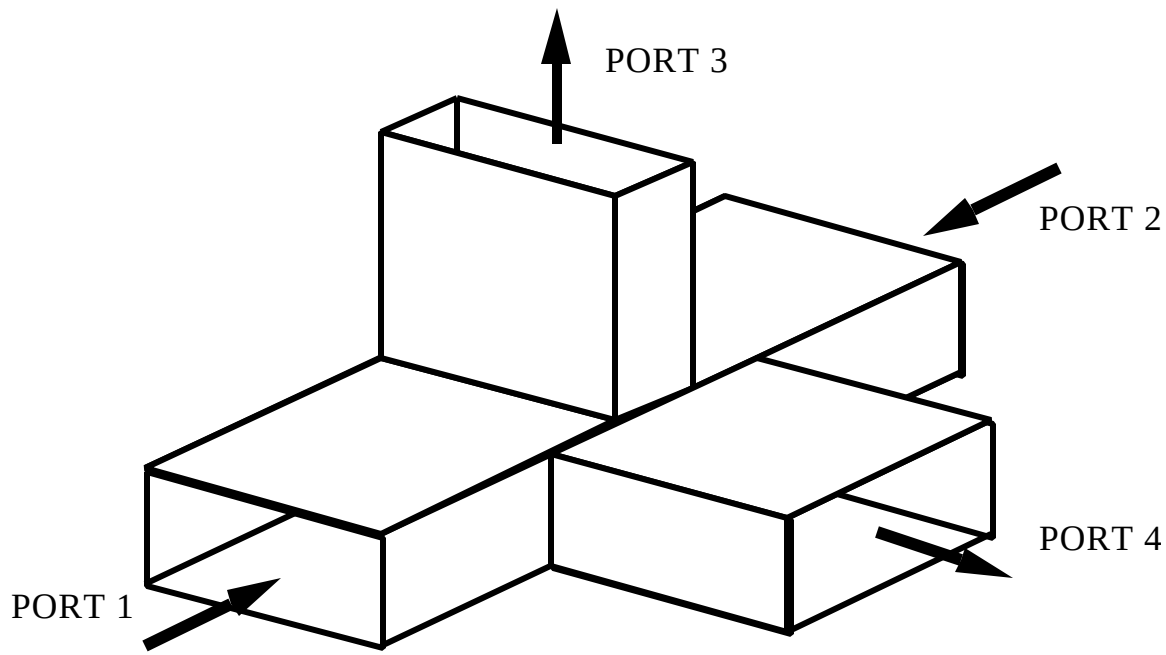

Filter Characteristics

Filters are characterized by their transfer functions $|H(f)| = |t| = \sqrt{1-|\Gamma|^2}$, where Γ is reflection coefficient. It is usually plotted as return loss in dB ($20\log_{10}(|\Gamma|)$) or transmission loss in dB ($20\log_{10}(|t|)$. Note that in many cases the phase of the transfer function is also important.

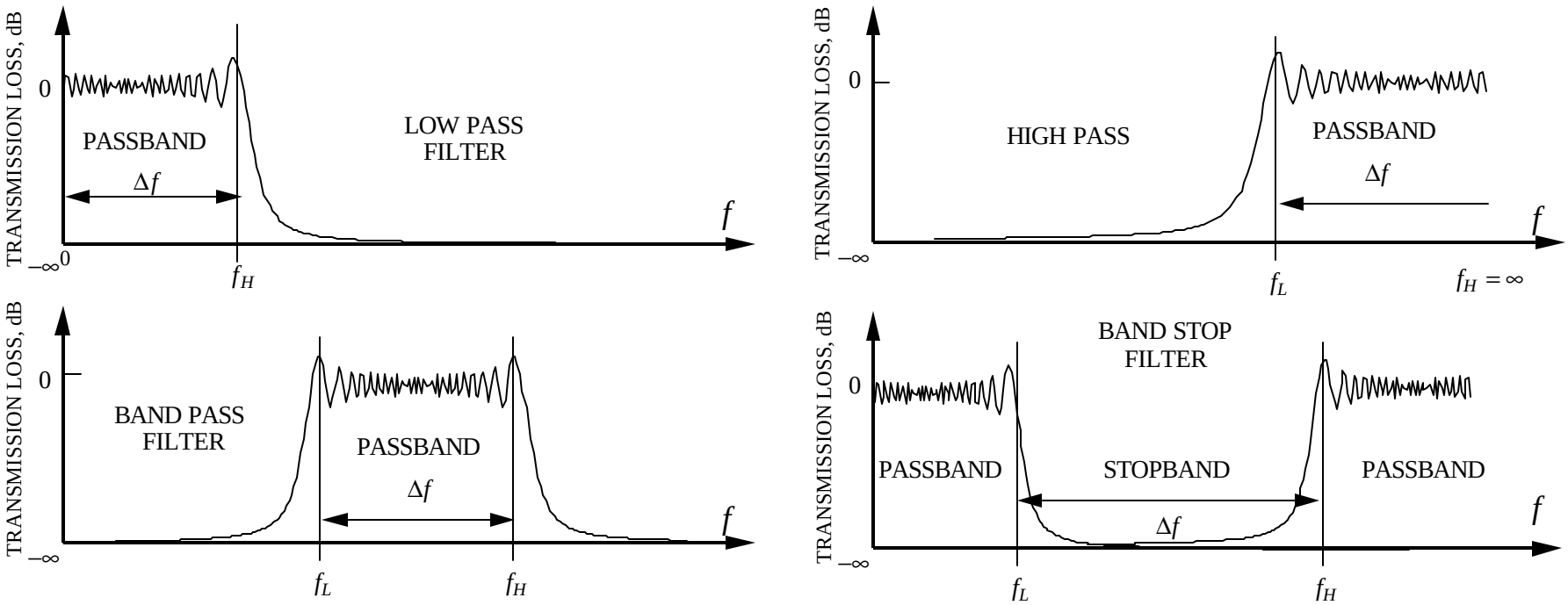

Mixers (1)

Mixers are multipliers; they multiply two CW signals (sinusoids). The signal from the antenna is at the carrier frequency. The second signal generated by the local oscillator is usually lower than the carrier frequency.

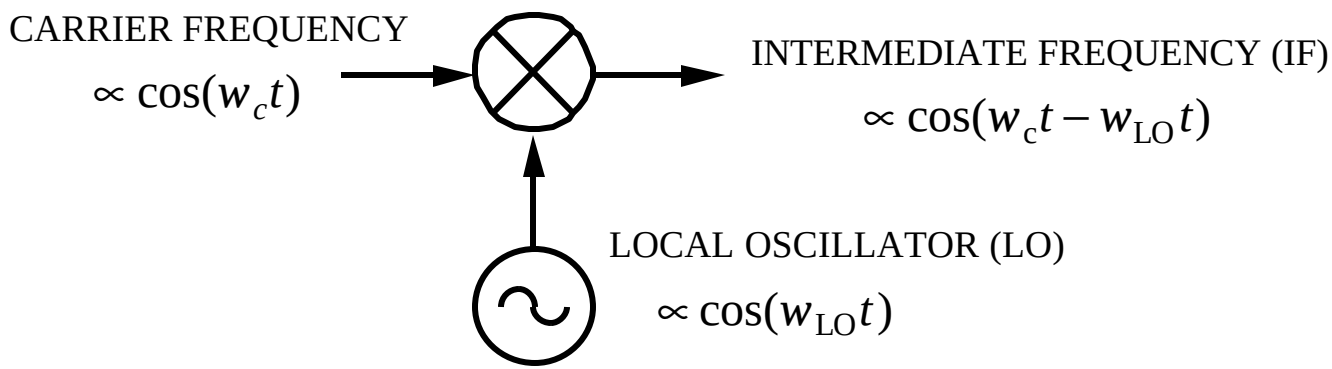

The output signal contains all of the cross products obtained by multiplying the two sinusoids. By trig identity:

$$\cos(w_c t)\cos(w_{LO} t) \propto \cos(w_c t - w_{LO} t) + \cos(w_c t + w_{LO} t)$$

The $f_c + f_{LO}$ (i.e., $w_c + w_{LO}$) is discarded by filtering and receiver processing is performed on the $f_c - f_{LO}$ term. The difference frequency $f_c - f_{LO}$ is called the <u>intermediate frequency</u> (IF).

Mixers (2)

Mixers are a means of frequency conversion. Converting to a frequency lower than the carrier is done primarily for convenience. If

$f_{LO} < f_c$ this process is referred to as <u>heterodyning</u>
$f_{LO} = f_c$ this process is referred to as <u>homodyning</u>

We have defined a mixer as a multiplier of two sinusoids. In most cases nonlinear devices are used to perform frequency conversion. A simple example is a single-ended diode mixer:

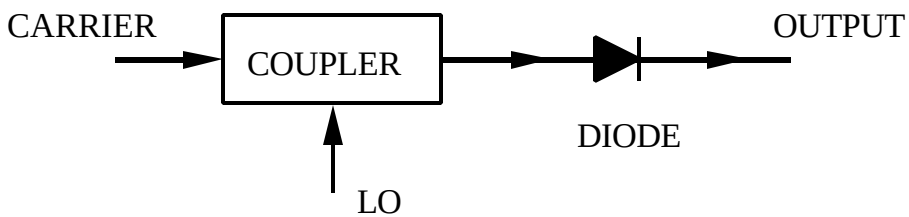

The diode is nonlinear; that is, the output for a single frequency input not only contains an input frequency term, but all of the harmonic terms as well

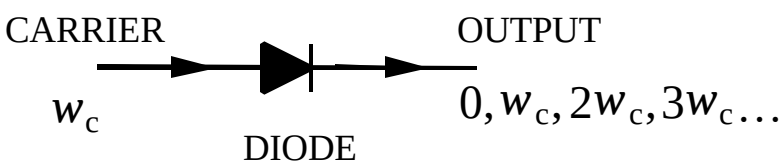

Mixers (3)

When two sinusoids are combined in a diode mixer, the harmonics of both frequencies are present as well as all of the cross products. A few of them are shown below:

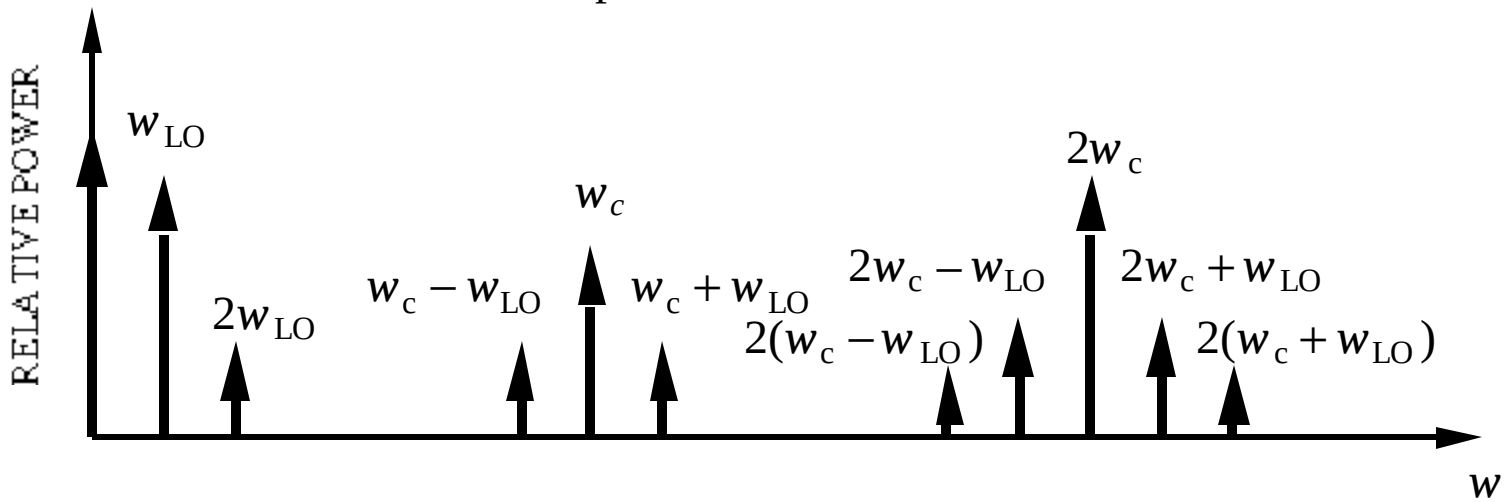

These are <u>intermodulation products</u> and must be controlled by proper mixer design to achieve high conversion efficiency and good noise performance.

The above results are based on a "small signal analysis" which assumes that the carrier signal level is much smaller than the LO voltage.

Even if the noise at both inputs is uncorrelated, the noise at the output is partially correlated. The noise figure depends on the impedances presented to all significant harmonics, not just the carrier and LO frequencies.

Input-Output Transfer Characteristic

Applies to transmitters (power amplifiers) and receivers (low noise amplifiers, mixers).

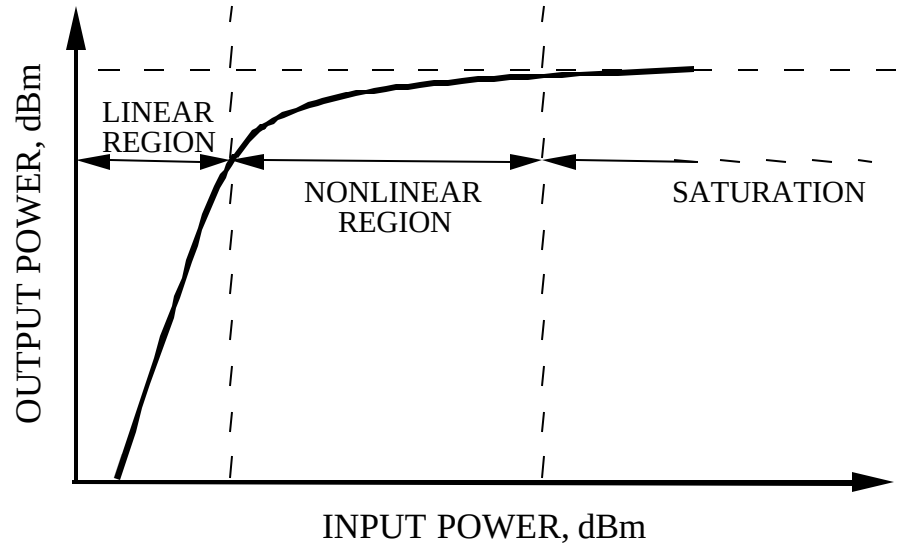

Region characteristics:
1. linear, $P_{\text{out}} \propto P_{\text{in}}$
2. saturation, $P_{\text{out}} \approx$ constant
3. nonlinear,

For a single input frequency $\Rightarrow$

$$V_{\text{out}} \propto \underbrace{a_1 V_{\text{in}}}_{\substack{\text{FUNDAMENTAL} \\ w_c}} + \underbrace{a_2 V_{\text{in}}^2}_{\substack{\text{SECOND} \\ \text{HARMONIC,} \\ 2w_c}} + \underbrace{a_3 V_{\text{in}}^3}_{\substack{\text{THIRD} \\ \text{HARMONIC,} \\ 3w_c}} + \cdots$$

Intermodulation Products

In the nonlinear region $V_{\text{out}} \propto a_1 V_{\text{in}} + a_2 V_{\text{in}}^2 + a_3 V_{\text{in}}^3 + \cdots$. If the input signal V_{in} contains more than one frequency, say f_1 and f_2, then all combinations of the two frequencies and their harmonics will be present in the output

$$f_{pqr} = \pm p\, f_1 \pm q\, f_2 \pm r\, f_{LO} \quad p,q,r = 0,1,2,\ldots$$

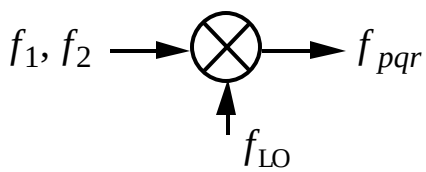

$$V_{\text{in}} = A\sin(w_1 t) + B\sin(w_2 t)$$

These are intermodulation products (IM): p or $q = 0$, single tone IM

$p,q,r = 1,2,\ldots$ multi-tone IM

Example: Both stationary target return ($f_1 = f_c$) and moving target return ($f_2 = f_c + f_d$) are passed through an amplifier. The third order IM (from the V_{in}^3 term) can lie in the passband. IM can cause signal distortion and potentially misinterpretation as a target.

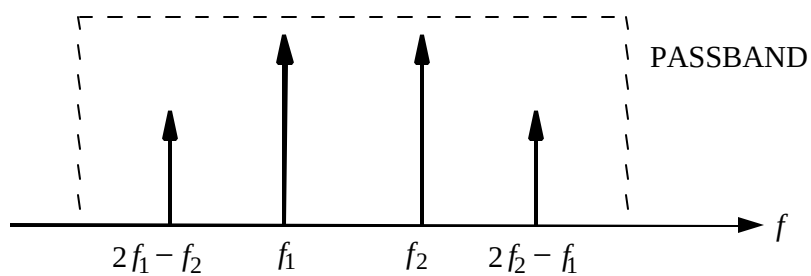

Intermodulation Example

Mixer RF passband: $29 \le f_{RF} \le 30$ GHz

LO frequency: $f_{LO} = 26$ GHz

IF passband: $f_{IF} = f_{RF} - f_{LO} = \begin{Bmatrix} 30 \\ 29 \end{Bmatrix} - 26 = \begin{Bmatrix} 3 \\ 4 \end{Bmatrix}$ GHz

Other intermodulation products: $f_{IF} = m f_{RF} - n f_{LO} \Rightarrow f_{RF} = \frac{1}{m}\left(f_{IF} - n f_{LO}\right)$

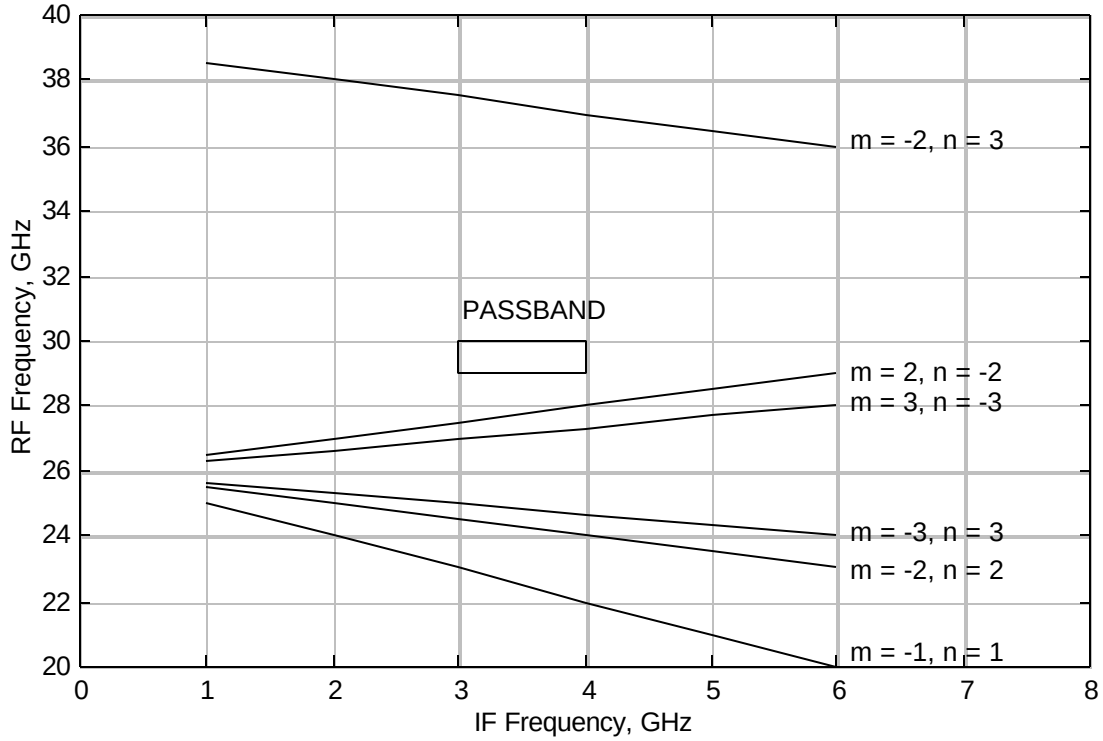

Amplifiers

Most receive amplifiers use gallium arsenide field effect transistors (GaAs FETs). Bipolar transistors are used at low microwave frequencies and performance is improving at higher microwave frequencies.

General circuit:

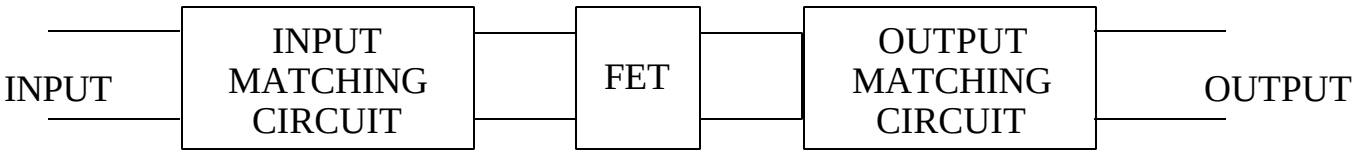

Design parameters:
1. transducer gain (ratio of the power delivered to the load to the power available from the source)
2. stability
3. noise figure

Typical amplifier circuit:

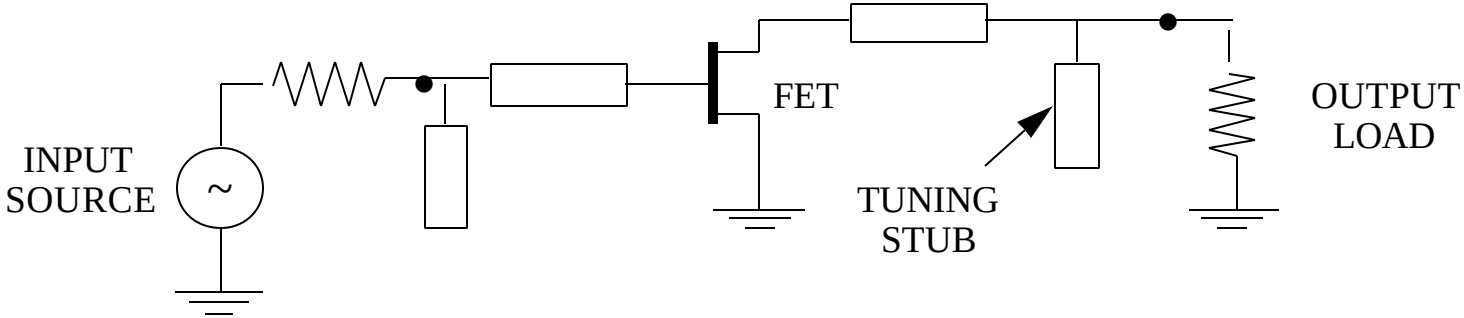

Low-Noise Amplifier

This is an example of older technology that uses discrete elements. Current designs use integrated circuits.

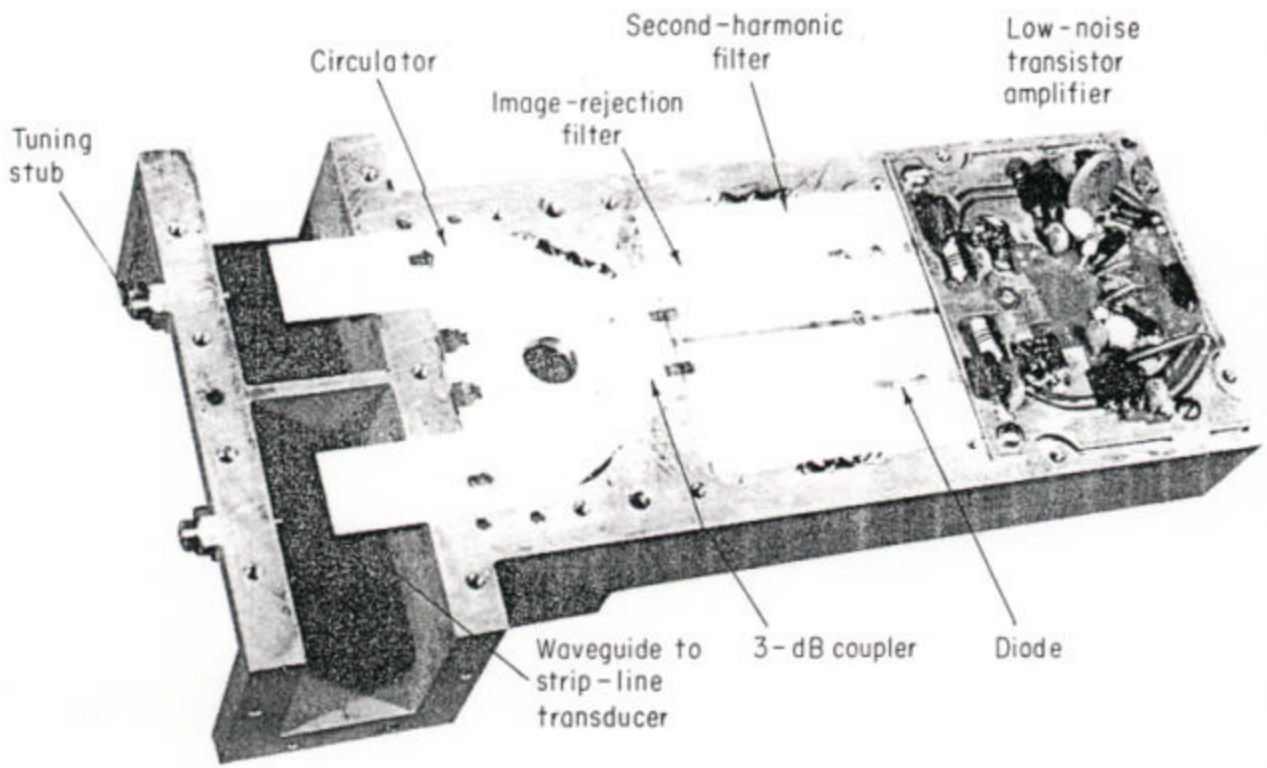

From *Microwave Semiconductor Devices and Their Circuit Applications* by Watson

Intermodulation Products of Amplifiers

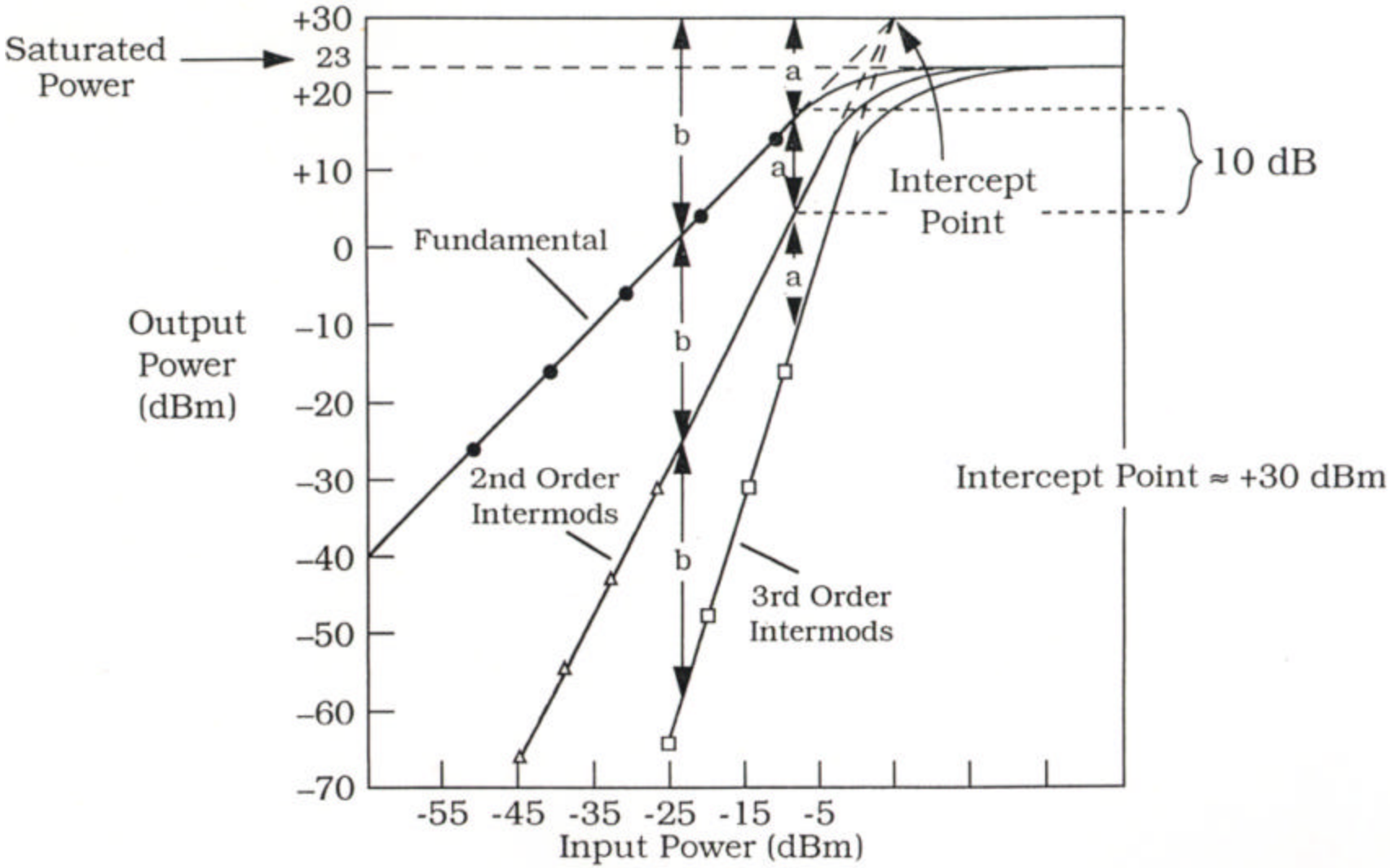

Sample Microwave Amplifier Characteristic

Example: Amplifier transfer function

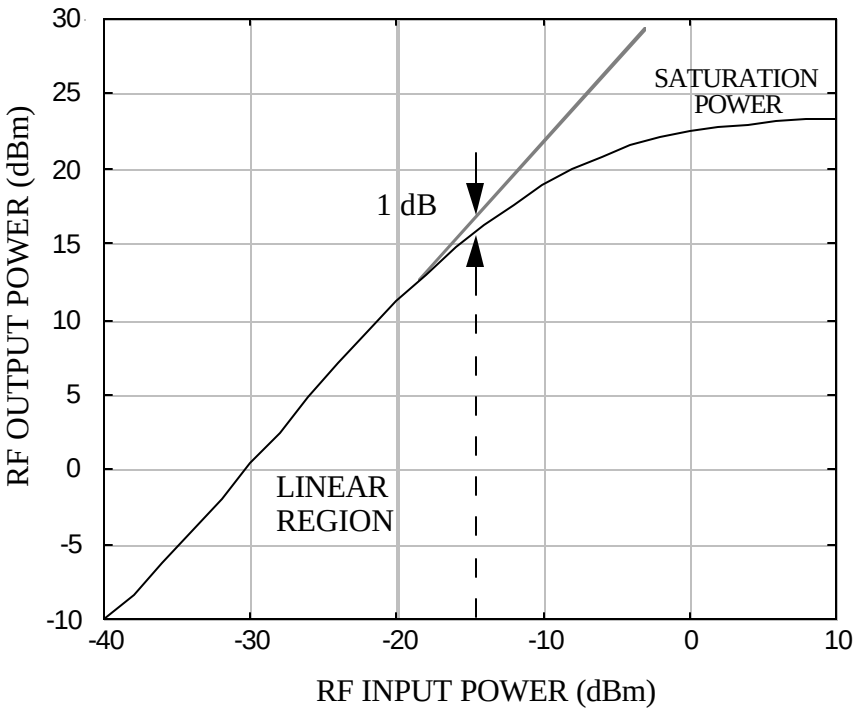

$$\text{Gain}, G = \frac{\text{Power Out}}{\text{Power In}}$$

Linear gain: 30 dB
Saturation power: 23 dBm
Saturation efficiency: 10%
Saturation gain: 20 dB
Power at 1 dB compression: 16 dBm
Efficiency at 1 dB compression: 3%
Gain at 1 dB compression: 29 dB
Voltage: 25 V
Current: 40 mA

Development of Sources

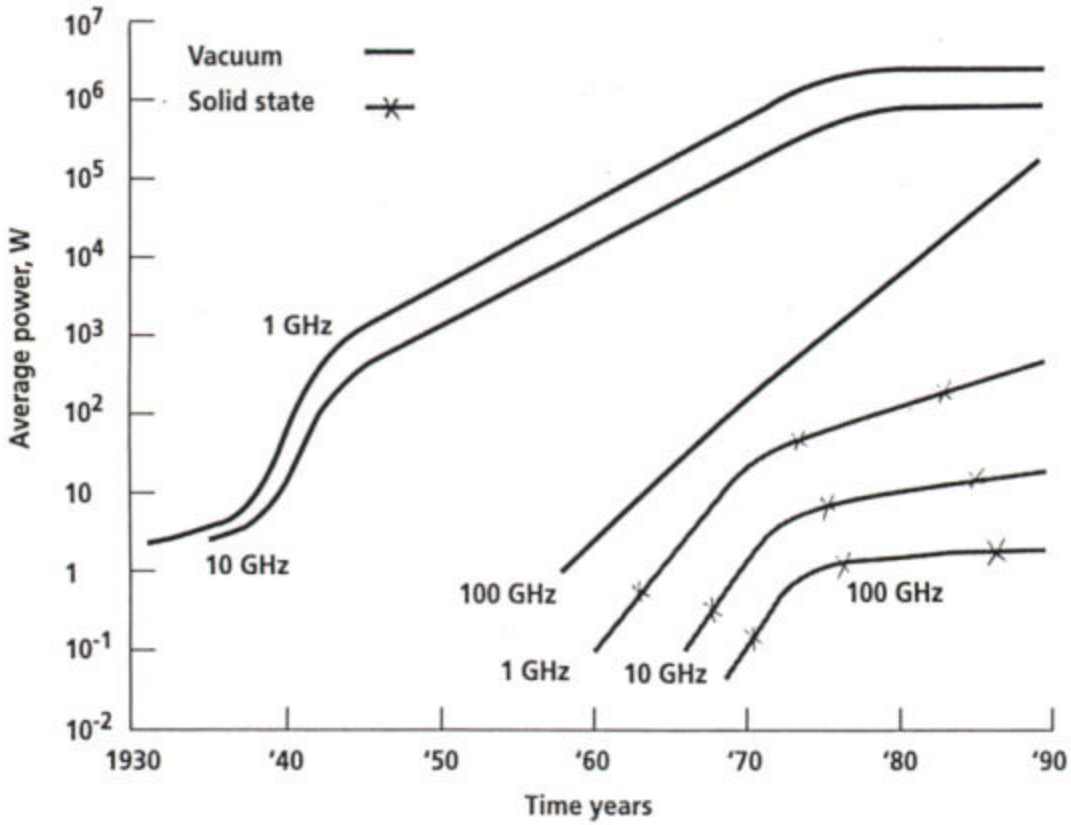

From Symons – "Tubes: Still Vital After All These Years," IEEE Spectrum, April 1998

Power Capabilities of Sources

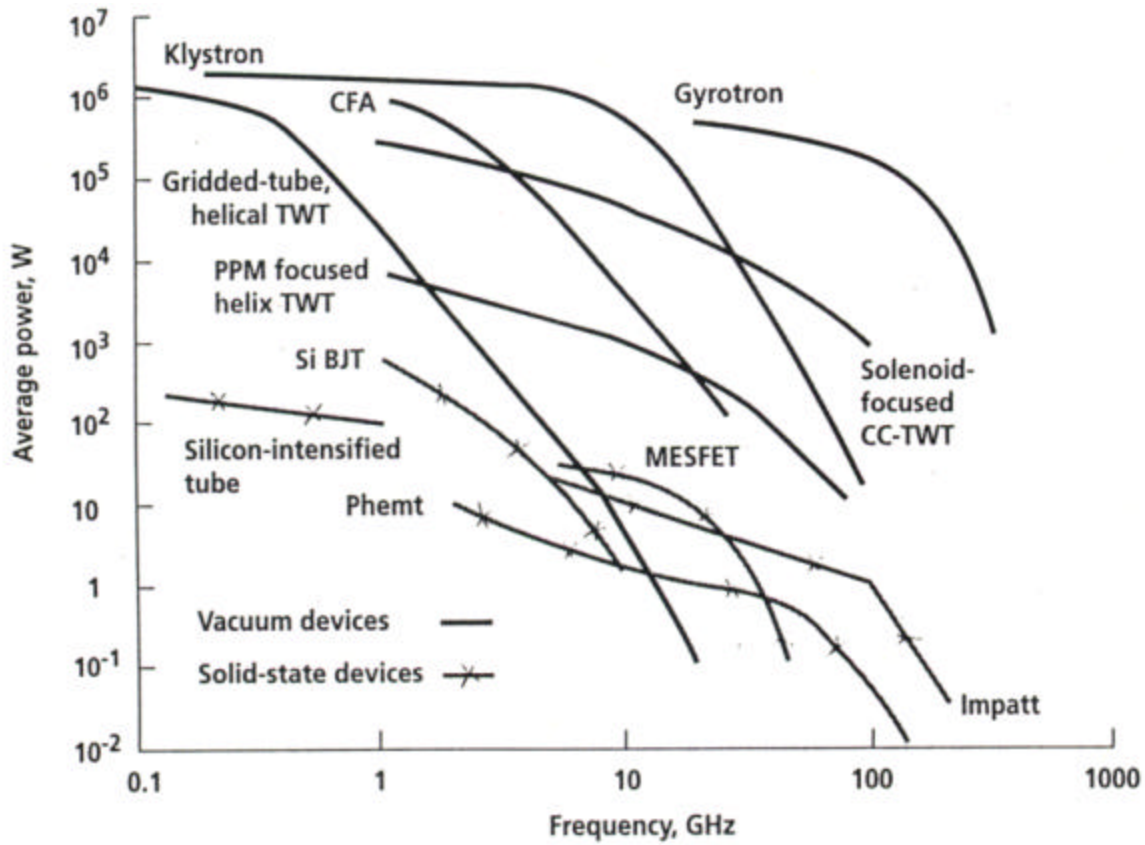

BJT = bipolar junction transistor
CC-TWT = constant-current traveling-wave tube
CFA = crossed-field amplifier
Impatt = impact avalanche and transit time diode
Phemt = pseudomorphic high–electron-mobility transistor
PPM = periodic permanent-magnet

From Symons – "Tubes: Still Vital After All These Years," IEEE Spectrum, April 1998

Transmitters (1)

Transmitter types: klystrons
traveling wave tubes (TWTs)
crossed field amplifiers (CFAs)
solid state amplifiers
magnetrons

SUMMARY OF TRANSMITTER CHARACTERISTICS

Parameter	Klystron	TWT	Linear CFA	Reentrant CFA	Solid State	Magnetron
Gain	High	High	Low	Low	Moderate	N/A
Bandwidth	Narrow	Wide	Wide	Wide	Wide	N/A
Noise	Low	Low	Moderate	Moderate	Low	Moderate
DC voltage	High	High	Moderate	Moderate	Low	Moderate
X-rays	High	High	Low	Low	None	Low
Size	Large	Medium	Medium	Small	Medium (Arrayed)	Small
Weight	Heavy	Medium	Medium	Light	Medium	Light
Efficiency	Low	Low	Moderate	Moderate	Moderate	High

Transmitters (2)

Microwave tube classification:

<u>Crossed field</u>: The dc electric field is perpendicular to the magnetic field. The general motion of the electrons is perpendicular to both fields. These are also known as "M-type" tubes. Examples are magnetrons and crossed field amplifiers.

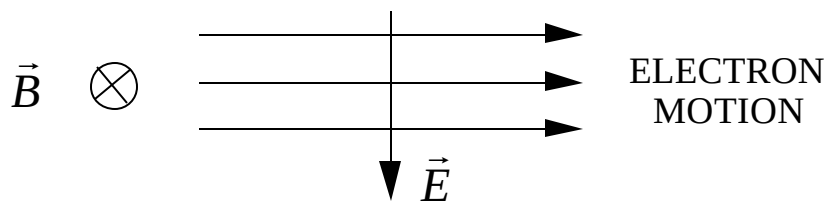

<u>Linear beam</u>: The general direction of the electron beam is parallel or antiparallel with the field vectors. Examples are klystrons and traveling wave tubes.

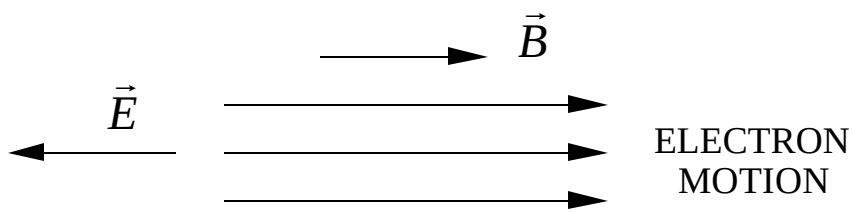

Klystrons

The oscillating electric field in the gap ($\vec{E}_g$) accelerates or decelerates electrons from the cathode. This causes "bunching" of the electrons into packets. They transfer their energy to the catcher cavity.

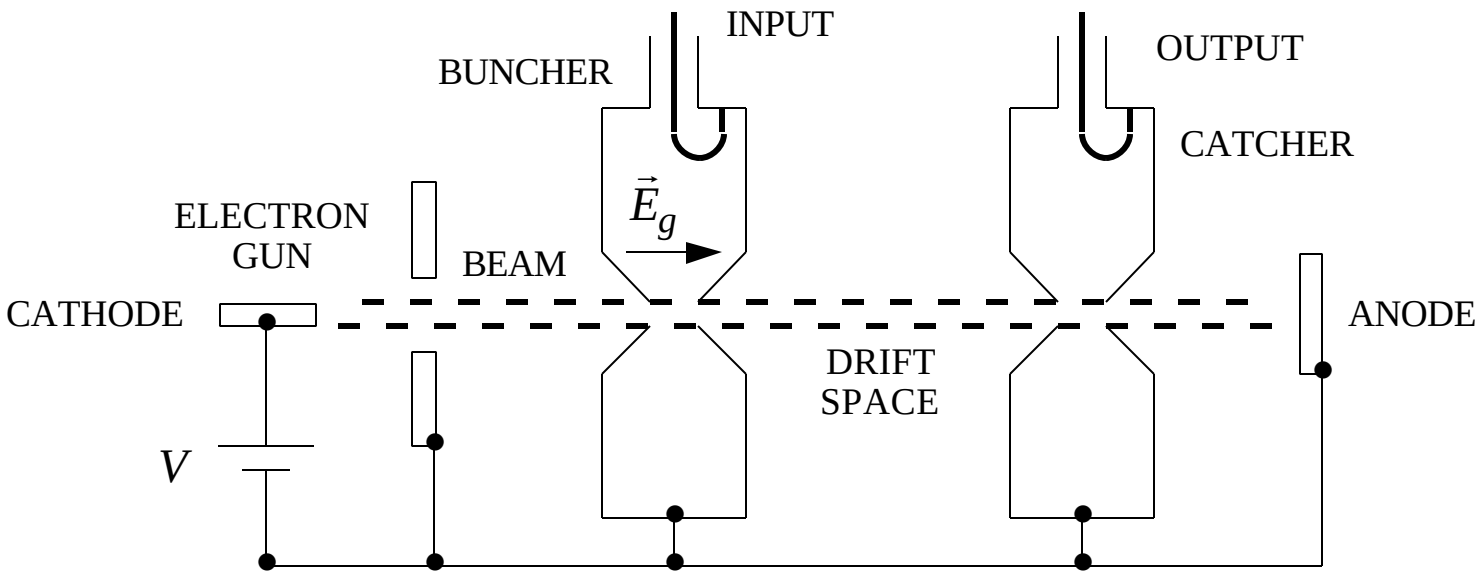

Klystron Operation

A klystron consists of a cathode and anode separated by an interaction space. In a two cavity klystron, the first cavity acts as a "buncher" and velocity modulates the electron beam. The second cavity is separated from the buncher by a drift space, which is chosen so that the AC current at the second cavity (the "catcher") is a maximum. The second cavity is excited by the AC signal impressed on the beam in the form of a velocity modulation with a resultant production of an AC current. The AC current on the beam is such that the level of excitation of the second cavity is much greater than that in the buncher cavity, and hence amplification takes place. If desired, a portion of the amplified output can be fed back to the buncher cavity in a regenerative manner to obtain self-sustained oscillations.

The catcher cavity can be replaced by a reflector, in which case it is referred to as a reflex klystron. The reflector forces the beam to pass through the buncher cavity again, but in the opposite direction. By the proper choice of the reflector voltage the beam can be made to pass through in phase with the initial modulating field. The feedback is then positive, and the oscillations will build up in amplitude until the system losses and nonlinear effects prevent further buildup.

(From: *Foundations of Microwave Engineering*, by R. E. Collin)

Cavity Magnetron

Cross section of a typical cavity magnetron

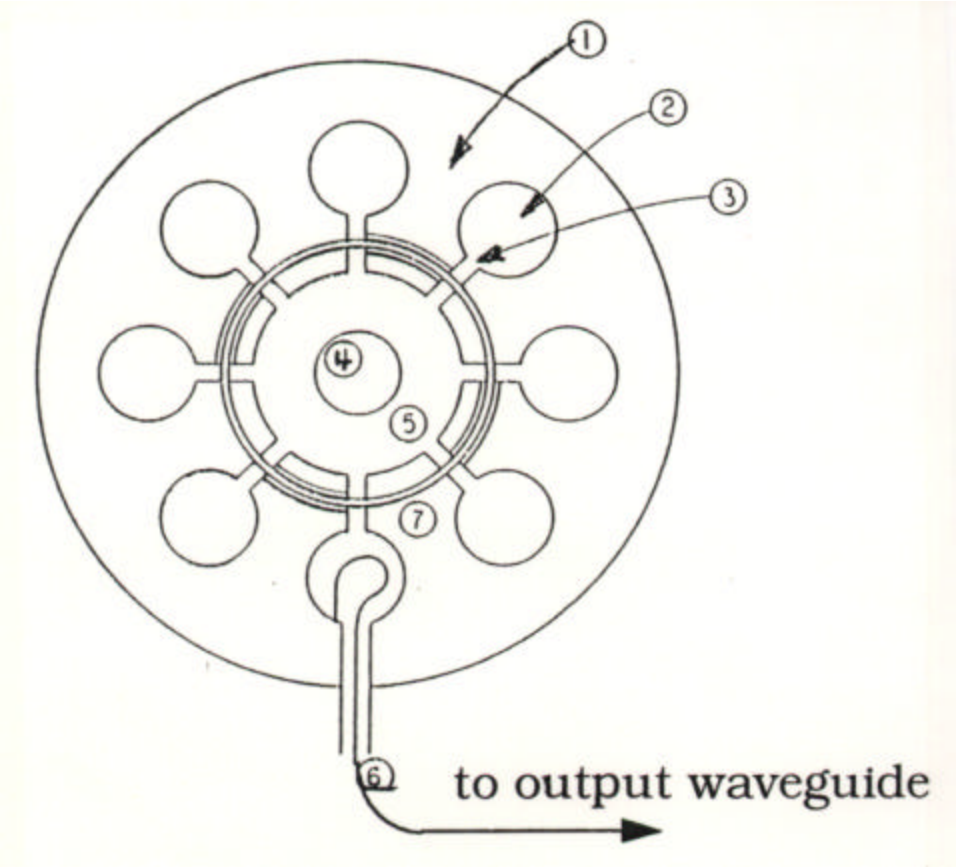

1. anode
2. cavity
3. coupling slot
4. cathode
5. interaction space
6. coupling loop
7. strapping

Magnetron Operation

A magnetron consists of a number of identical resonators arranged in a cylindrical pattern around a cylindrical cathode. A permanent magnet is used to produce a strong magnetic field B_o normal to the cross section. The anode is kept at a high voltage relative to the cathode. Electrons emitted from the cathode are accelerated toward the anode block, but the presence of the magnetic field produces a force $(-ev_r B_o)$ in the azimuthal direction which causes the electron trajectory to be deflected in the same direction.

If there is present an AC electromagnetic field in the interaction space that propagates in the azimuthal direction with a phase velocity wr, strong interaction between the field and the circulating electron cloud can take place. The usual mode of operation is the p mode where the phase change between adjacent cavities is p radians. Each cavity with its input gap acts as a short-circuited transmission line a quarter of a wavelength long, and hence has a maximum electric field across the gap. A synchronism between the AC field and the electron cloud implies that those electrons located in the part of the field that acts to slow the electrons give up energy (and vice versa). Electrons that slow down move radially outward and are intercepted by the anode. Electrons that are accelerated by the AC field move radially inward until they are in phase with the field, and thus give up energy to the field. When the latter happens, they slow down and move to the anode. Therefore the only electrons lost from the interaction space are those that have given up a net amount of energy.

(From: *Foundations of Microwave Engineering*, by R. E. Collin)

Eight Cavity Magnetron

Electron cloud in the interaction space of an eight cavity magnetron

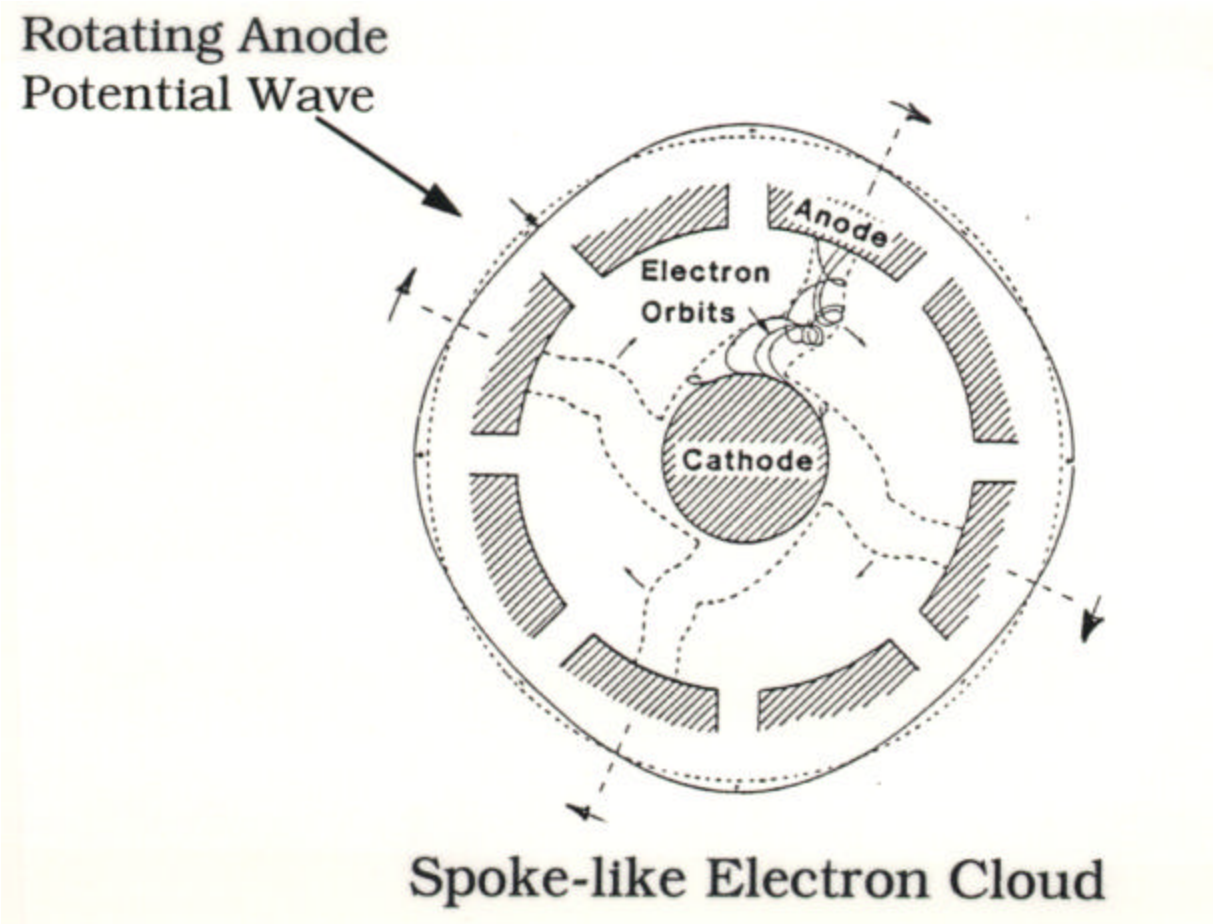

Magnetron Basics (1)

Three fields present: $\vec{E}$ due to voltage applied between anode and cathode
$\vec{B}$ due to magnet
$\vec{E}_{\mathrm{RF}}$ in the interaction space

If $\vec{B}$ is strong enough electrons will be prevented from reaching the anode (this is <u>magnetic insulation</u>). The critical value of the magnetic field density is

$$\vec{B}_c = \frac{m_o c}{e\, d_e}\sqrt{g^2 - 1}$$

where: $d_e = \text{effective gap} = \dfrac{r_a^2 - r_c^2}{2r_a}$ (r_a = anode radius; r_c = cathode radius)

g = relativistic factor $= \dfrac{1}{\sqrt{1-(v/c)^2}} = 1 + \dfrac{eV_o}{m_o c^2}$

e = electronic charge; m_o = mass; V_o = beam voltage

The cathode orbit drift velocity is

$$\vec{v}_d = \frac{\vec{E} \times \vec{B}}{|\vec{B}|^2}$$

Magnetron Basics (2)

The Bruneman-Hartree resonance condition for mode n:

$$B_{\mathrm{BH}} = \frac{2m^2}{e^2} eV_o \frac{r_a^2}{r_a^2 - r_c^2} \frac{n}{w_n}$$

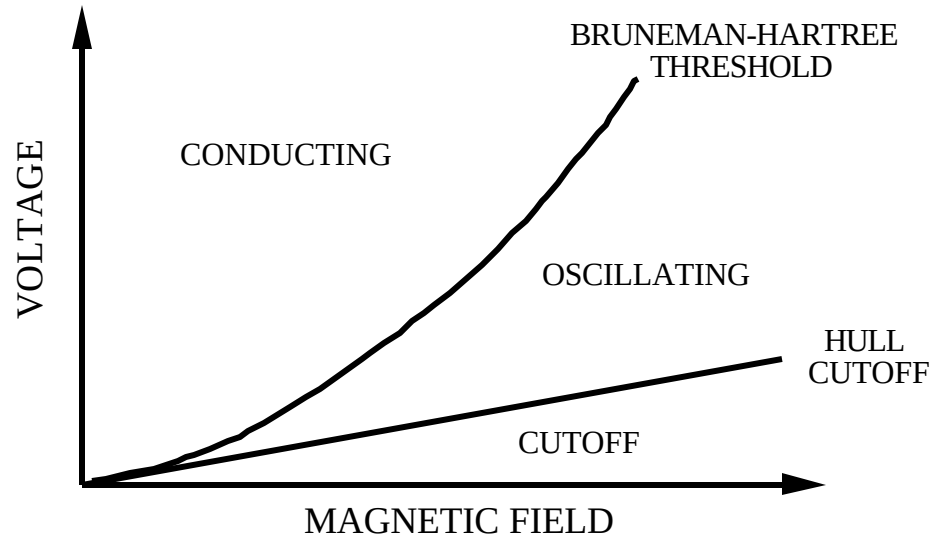

Usually the cavities are spaced half a wavelength at the RF. The drift velocity must equal the phase velocity. At alternating cavities the electrons reach the anode. Therefore "spokes" arise which rotate around the interaction space. RF energy grows at the expense of the kinetic and potential energy of the electrons.

Free-Electron Laser (FEL) Operation

A free electron laser consists of an electron beam, a periodic pump field and the radiation field. The electron beam passes through the pump field and begins to oscillate. (The pump field is usually a static periodic magnetic field called a "wiggler," but in principle it can be any field capable of producing a transverse electron oscillation.) The oscillating electrons radiate, and the combination of the radiation field and wiggler field produces a beat wave which tends to bunch electrons in the axial direction. The bunching force provided by the beating of the radiation and wiggler fields is due to a so-called pondermotive wave, which is characterized by a periodic axial force. The bunched electrons radiate more coherently, thereby strengthening the radiation, which causes more bunching, then produces stronger and more coherent radiation, and so forth. The electrons in the beam are not bound to any nucleus, hence the term "free electron."

Like all lasers, a FEL can operate as either an amplifier or oscillator. Amplifiers require high growth rates so that large gains in the radiation field can occur in a reasonable distance. This requirement generally restricts the use of FELs to millimeter wavelengths or shorter. The most important FEL attributes are broad frequency-tuning ability, high efficiency (> 40%), wide bandwidth, and high power (> 10 MW at millimeter wave frequencies).

(From: High-Power Microwave Sources, Chapter 6, by J. A. Pasour)

Free-Electron Lasers

Example of a basic free electron laser

$l = l_w/(2g_o^2)(1+K_w^2/2) =$ radiation wavelength
$K_w = eB_w/mck_w =$ wiggler strength parameter
$l_w = 2p/k_w$ wiggler period; $B_w =$ wiggler magnetic field;
$e =$ electron charge; $m =$ electron rest mass; $c =$ speed of light

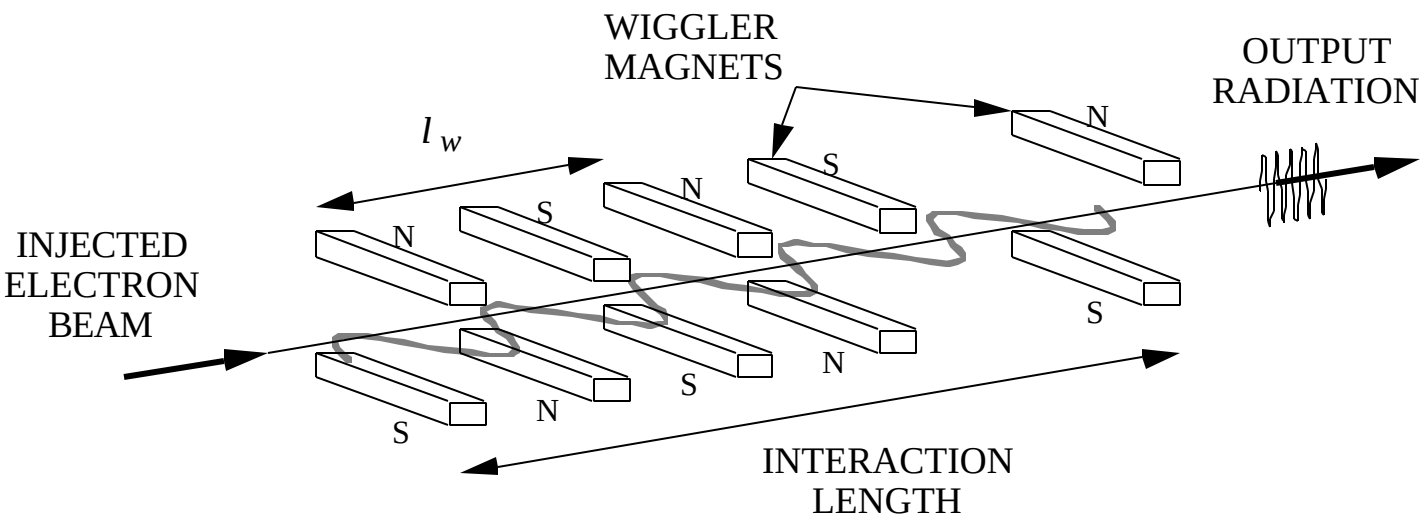

Radar Waveform Parameter Measurements (1)

AN/APS-10 short pulse width

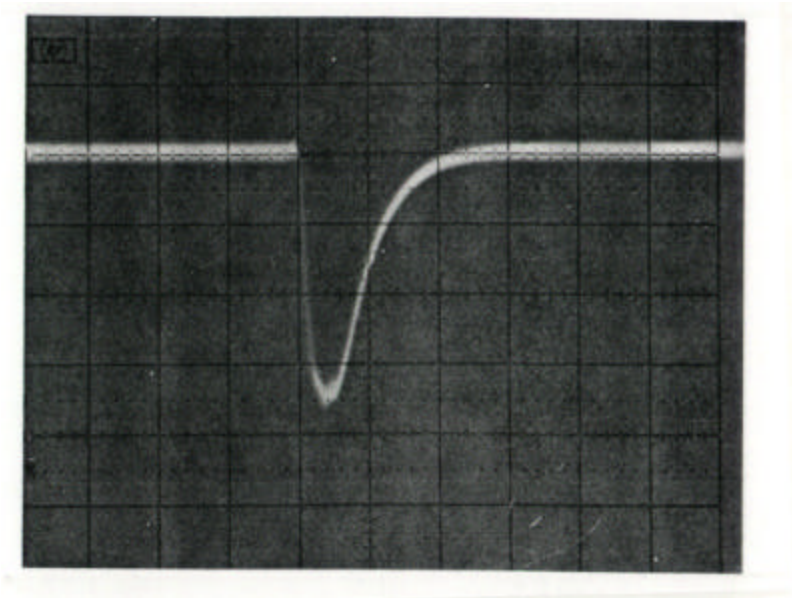

AN/APS-10 long pulse width

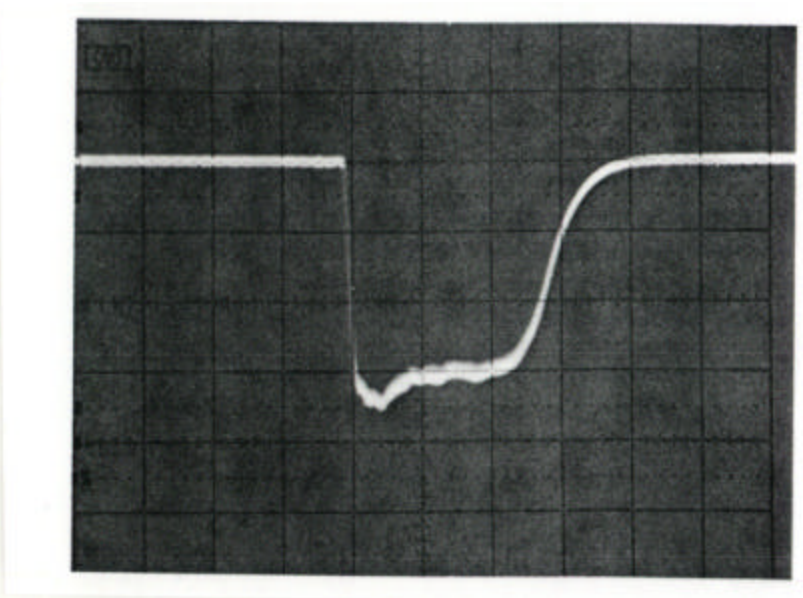

(Figures from HP Application Note 174-14)

Radar Waveform Parameter Measurements (2)

AN/APS-10 short pulse spectrum

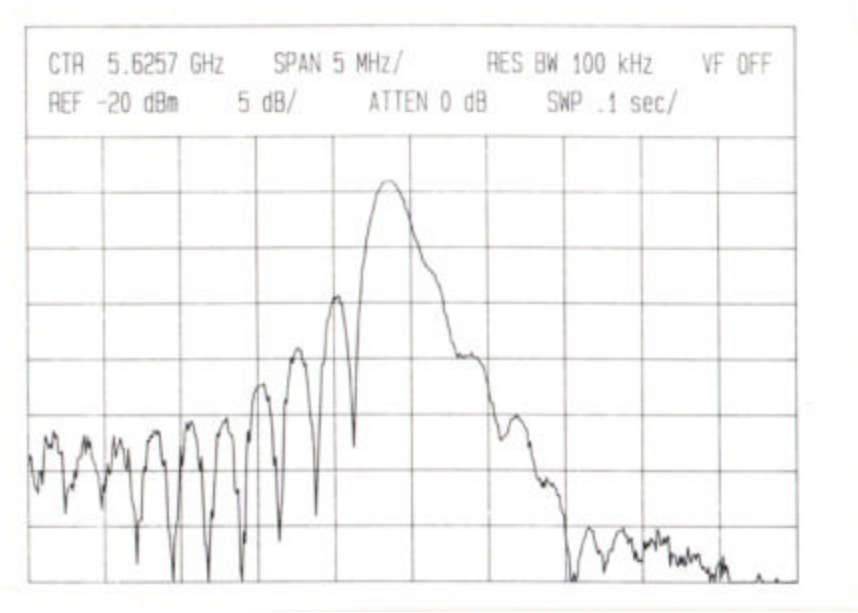

AN/APS-10 long pulse spectrum

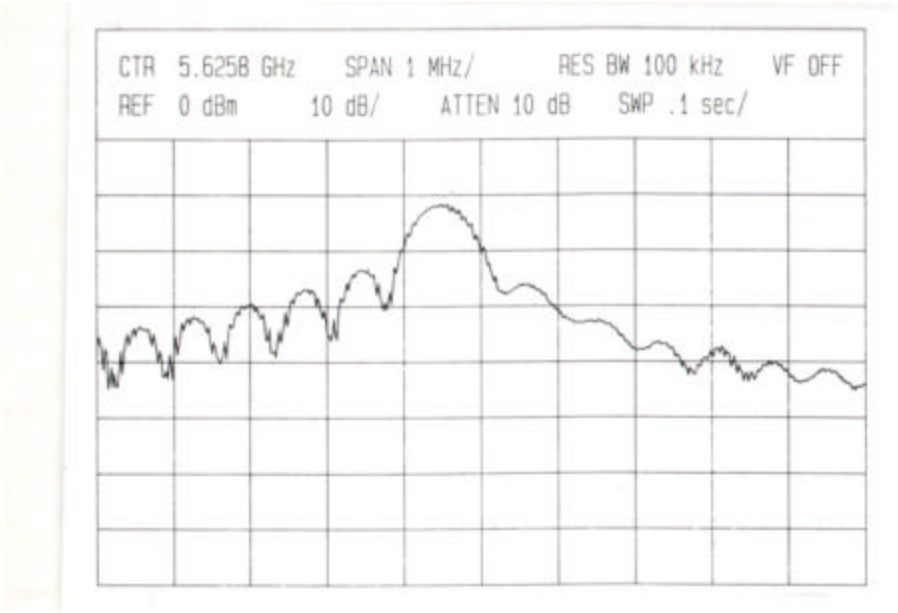

(Figures from HP Application Note 174-14)

Radar Waveform Parameter Measurements (3)

AN/APS-10 frequency point plot
(1000 points over 10 minutes)

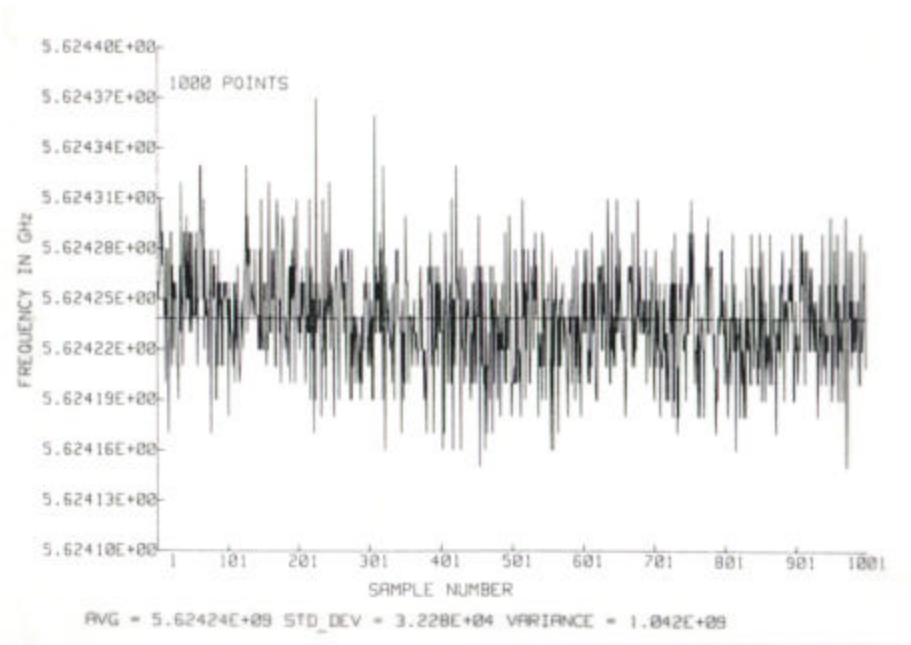

AN/APS-10 pulse width point plot
(short pulse width)

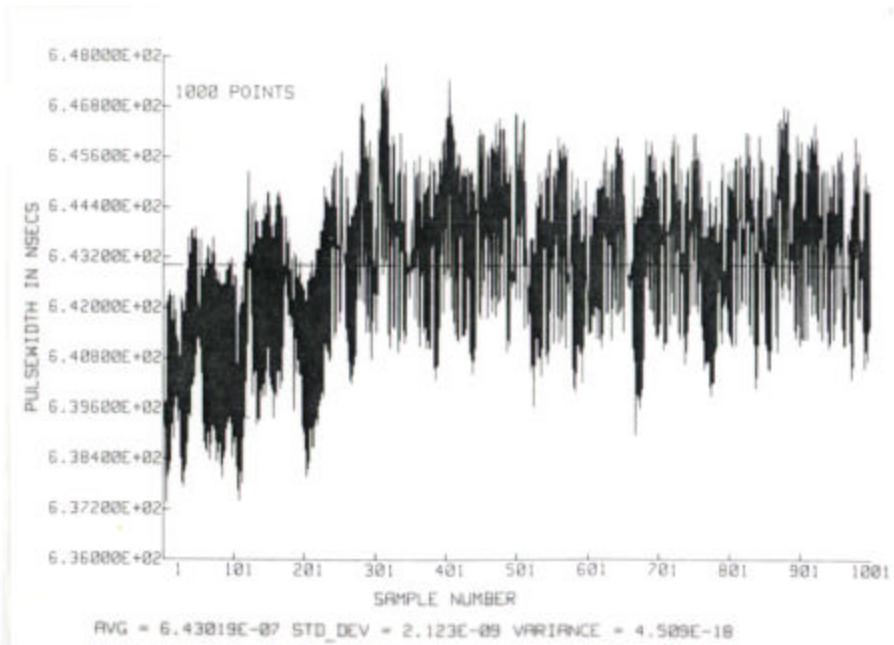

(Figures from HP Application Note 174-14)

Radar Waveform Parameter Measurements (4)

AN/APS-10 pulse repetition period
(1000 points over 10 minutes)

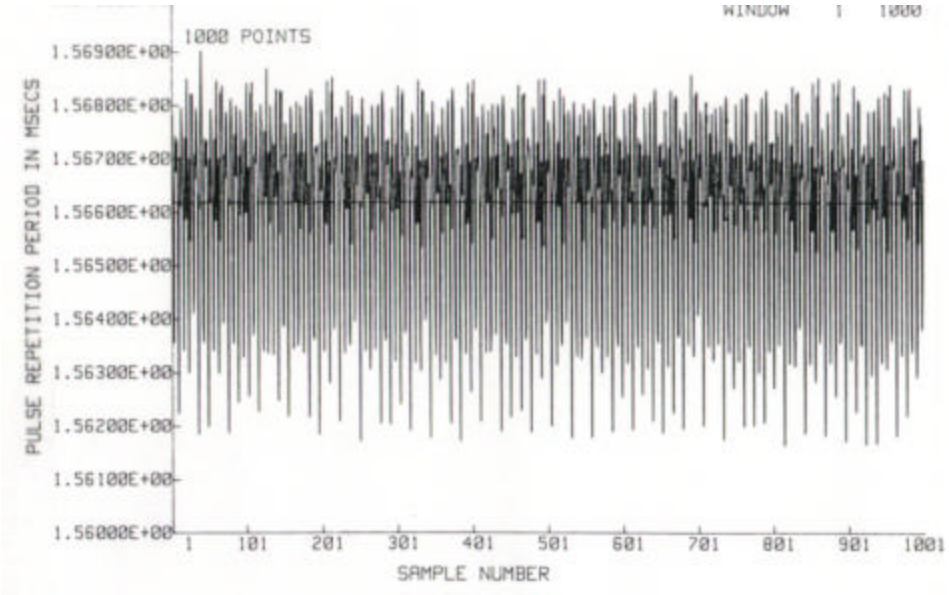

AN/APS-10 pulse repetition period
histogram (PDF)

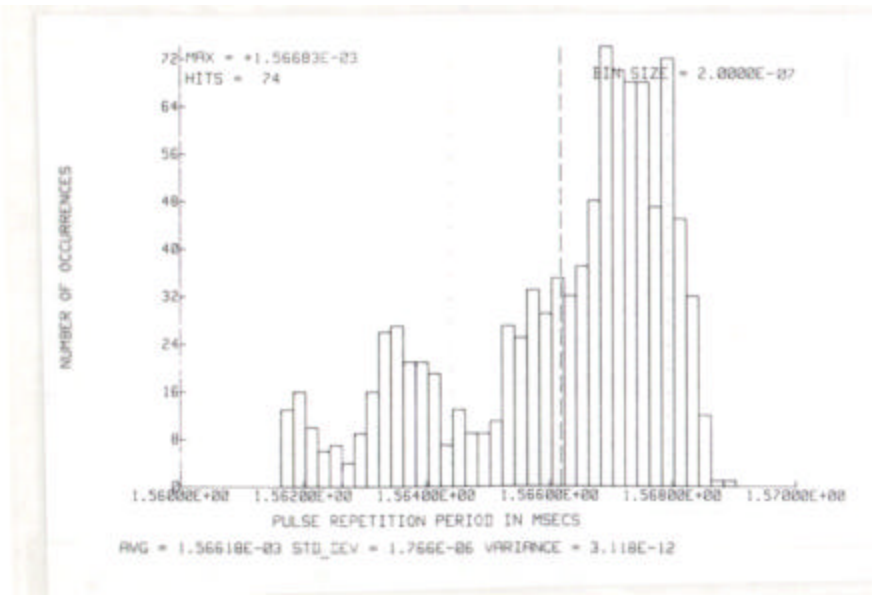

(Figures from HP Application Note 174-14)

Radar Waveform Parameter Measurements (5)

Barker Coded Waveform

60 MHz IF signal

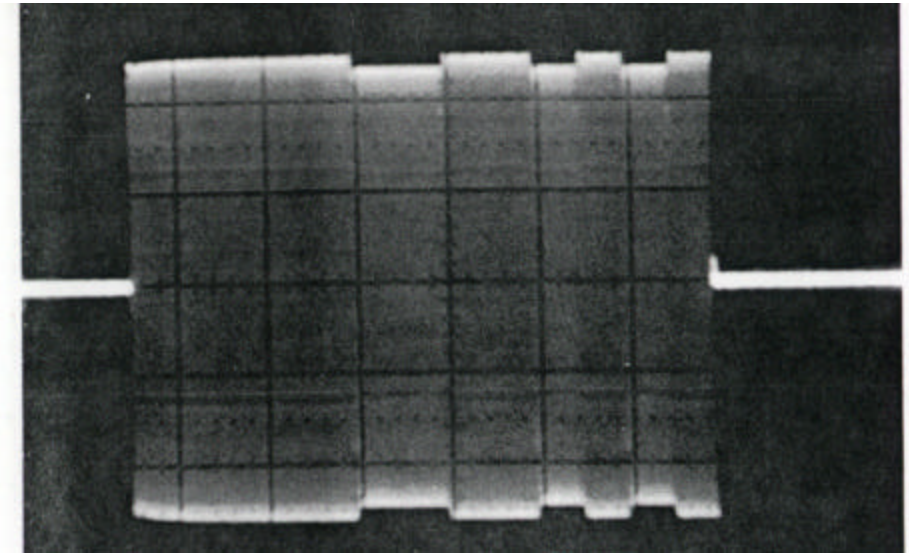

Phase shift in 60 MHz IF signal

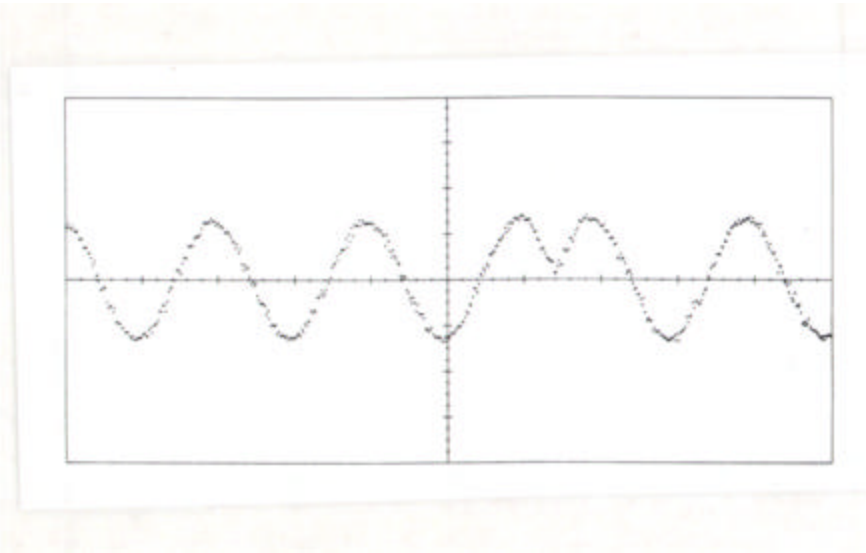

(Figures from HP Application Note 174-14)